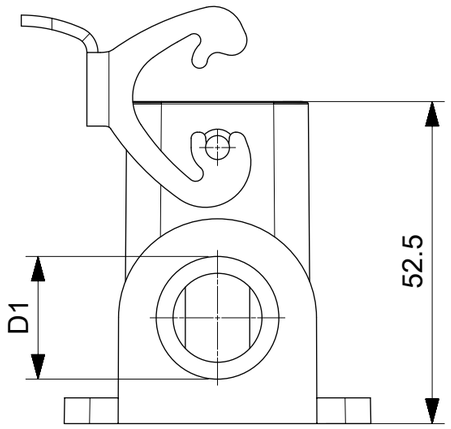

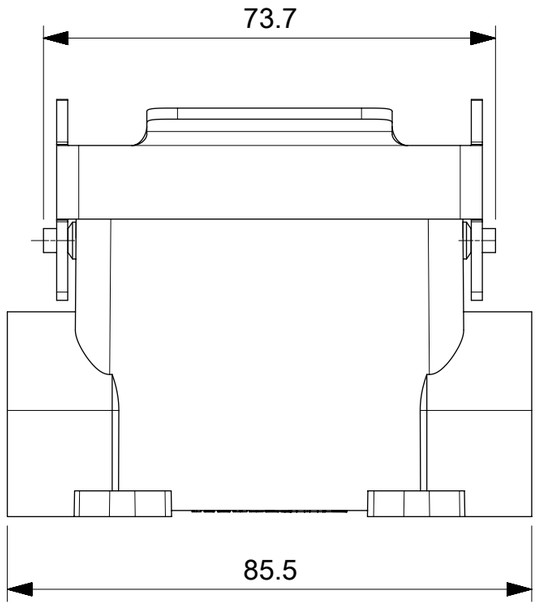

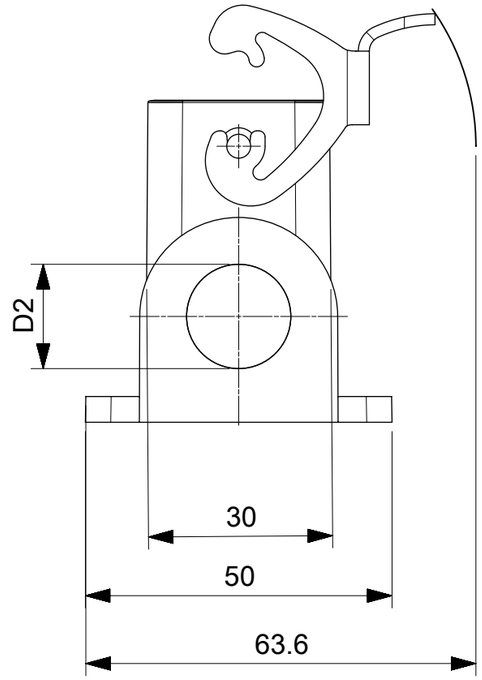

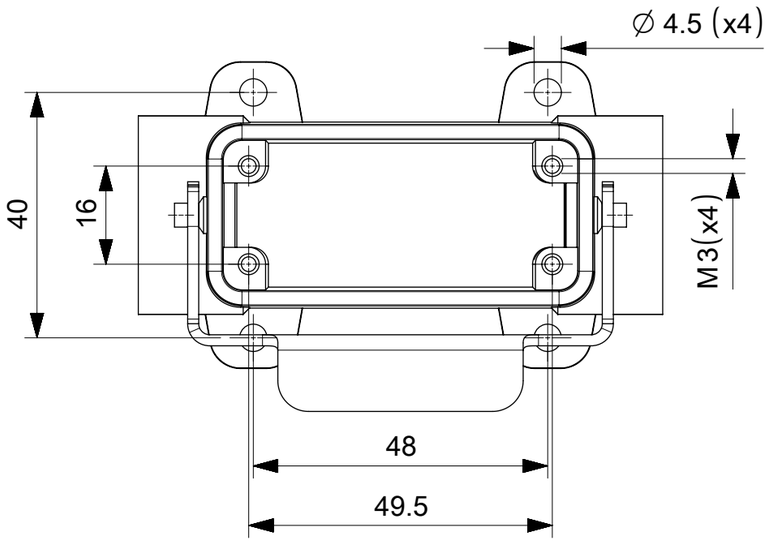

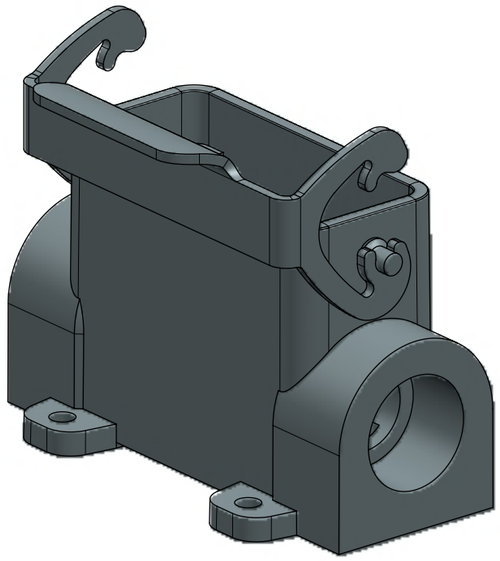

SAP No.	Eng.No.	D1	D2
936011126	7810.4501.0	M20	-
936011128	7810.4502.0	M20	M20
936011131	7810.4503.0	M25	-
936011133	7810.4504.0	M25	M25
936011136	7810.4505.0	Pg16	-
936011138	7810.4506.0	Pg16	Pg16
936011141	7810.4507.0	Pg21	-
936011143	7810.4508.0	Pg21	Pg21

THIS DRAWING CONTAINS INFORMATION THAT IS PROPRIETARY TO MOLEX ELECTRONIC TECHNOLOGIES, LLC AND SHOULD NOT BE USED WITHOUT WRITTEN PERMISSION

SYMBOLS: E = 0; C = 0; B = 0; S = 0; ▼ = 0; C = 0; ☒ = 0; ■ = 0; ▽ = 0

DIMENSION UNITS: mm | SCALE: 1:1

GENERAL TOLERANCES (UNLESS SPECIFIED)

ANGULAR TOL	± °
4 PLACES	±
3 PLACES	±
2 PLACES	±
1 PLACE	±
0 PLACES	±

DRAFT WHERE APPLICABLE MUST REMAIN WITHIN DIMENSIONS

CURRENT REV DESC:

EC NO: 172333
DRWN: AKHEMIRI 2018/02/13
CHK'D: DMERONI 2018/02/13
APPR: AMELZI 2018/02/14

INITIAL REVISION:
DRWN: AKHEMIRI 2017/12/11
APPR: AMELZI 2018/02/14

FIRST ANGLE PROJECTION | DRAWING: A3-SIZE | SERIES: 93601

molex

10A STANDARD SURFACE HOUSING 1 LEVER

PRODUCT CUSTOMER DRAWING

DOCUMENT NUMBER	DOC TYPE	DOC PART	REVISION
936011126	PSD	000	A

MATERIAL NUMBER	CUSTOMER	SHEET NUMBER
SEE TABLE	GENERAL MARKET	1 OF 1

DOCUMENT STATUS	P1	RELEASE DATE	2018/02/14 12:27:05

FORMAT: master-tb-prod-A3
REVISION: H
DATE: 2017/10/06