STANDARD VERSION

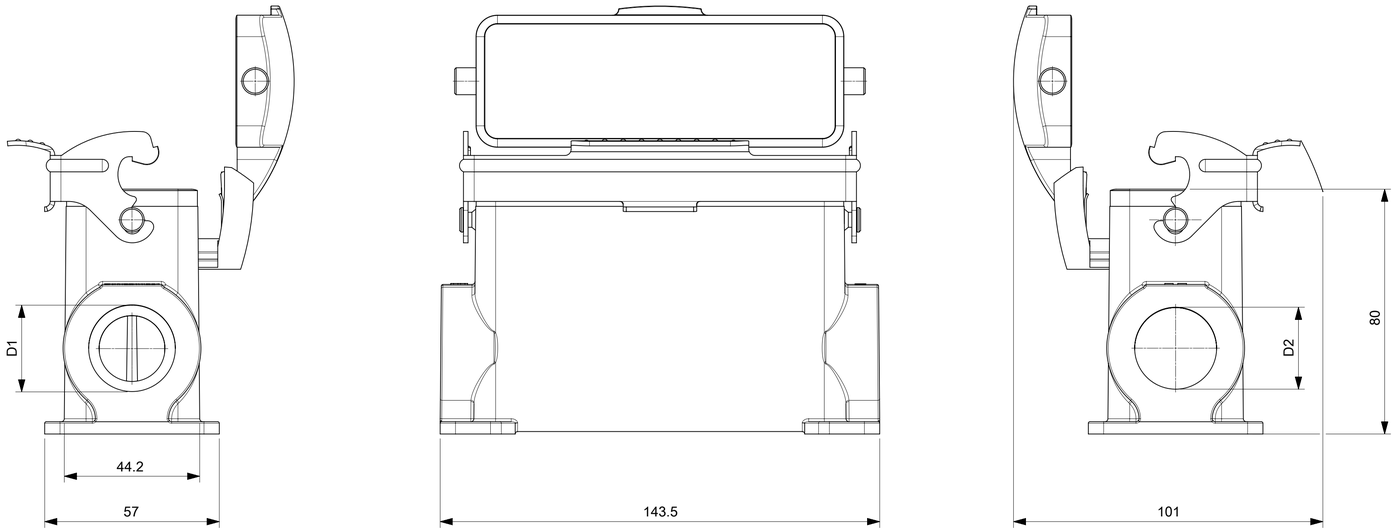

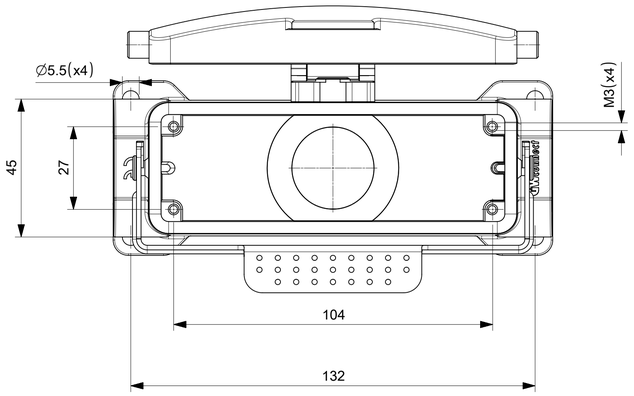

STANDARD HIGH VOLTAGE VERSION

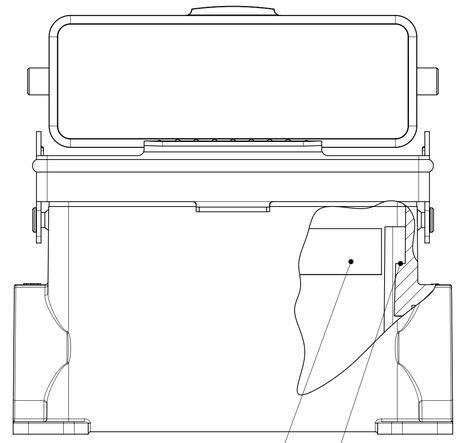

INSULATING ADHESIVE TAPE
ON BOTH SIDES

SUITABLE FOR
HIGH VOLTAGE INSERTS

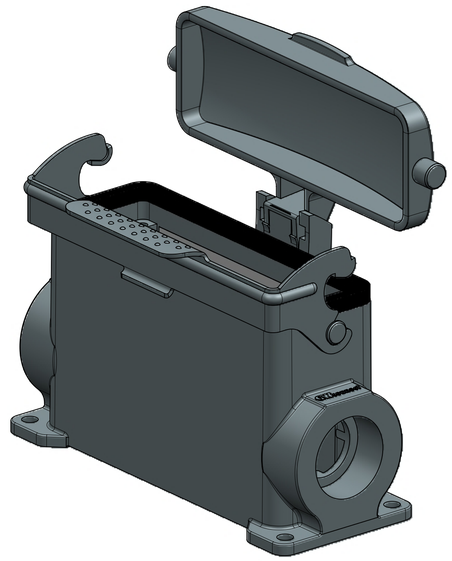

SAP.No.	Eng.No.	TYPE	D1	D2
936013964	7824.7292.0	STANDARD	M 32	-
936013966	7824.7293.0	STANDARD	M 32	M 32
936013970	7824.7294.0	STANDARD	M 40	-
936013972	7824.7295.0	STANDARD	M 40	M 40
936013975	7824.7296.0	STANDARD	Pg 21	-
936013977	7824.7297.0	STANDARD	Pg 21	Pg 21
936013981	7824.7298.0	STANDARD	Pg 29	-
936013983	7824.7299.0	STANDARD	Pg 29	Pg 29
936013965	7824.7292.2	STANDARD HIGH VOLTAGE	M 32	-
936013969	7824.7293.2	STANDARD HIGH VOLTAGE	M 32	M 32
936013971	7824.7294.2	STANDARD HIGH VOLTAGE	M 40	-
936013974	7824.7295.2	STANDARD HIGH VOLTAGE	M 40	M 40
936013976	7824.7296.2	STANDARD HIGH VOLTAGE	Pg 21	-
936013980	7824.7297.2	STANDARD HIGH VOLTAGE	Pg 21	Pg 21
936013982	7824.7298.2	STANDARD HIGH VOLTAGE	Pg 29	-
936013986	7824.7299.2	STANDARD HIGH VOLTAGE	Pg 29	Pg 29

THIS DRAWING CONTAINS INFORMATION THAT IS PROPRIETARY TO MOLEX ELECTRONIC TECHNOLOGIES, LLC AND SHOULD NOT BE USED WITHOUT WRITTEN PERMISSION

SYMBOLS: FA = 0, FC = 0, FD = 0, S = 0, ▼ = 0, C = 0, ☒ = 0, ■ = 0, C = 0

DIMENSION UNITS: mm | SCALE: 1:1

GENERAL TOLERANCES (UNLESS SPECIFIED)
ANGULAR TOL ± °
4 PLACES ±
3 PLACES ±
2 PLACES ±
1 PLACE ±
0 PLACES ±

DRAFT WHERE APPLICABLE MUST REMAIN WITHIN DIMENSIONS

CURRENT REV DESC:

EC NO: 177920
DRWN: AKHEMIRI 2018/06/06
CHK'D: DMERONI 2018/06/06
APPR: AMELZI 2018/06/12

INITIAL REVISION:
DRWN: AKHEMIRI 2018/05/29
APPR: AMELZI 2018/06/12

FIRST ANGLE PROJECTION | DRAWING: A1-SIZE | SERIES: 93601

molex

24B STANDARD AND HIGH VOLTAGE SURFACE MOUNTING HOUSING WITH COVER 1 LEVER HIGH CONSTRUCTION

PRODUCT CUSTOMER DRAWING

DOCUMENT NUMBER	DOC TYPE	DOC PART	REVISION
936013976	PSD	000	A

MATERIAL NUMBER	CUSTOMER	SHEET NUMBER
SEE TABLE	GENERAL MARKET	1 OF 1

DOCUMENT STATUS	P1	RELEASE DATE	2018/06/12 08:11:26