Diritti riservati All rights reserved

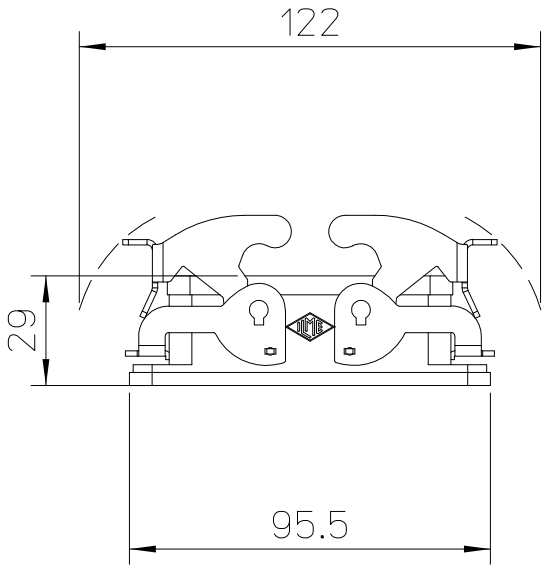

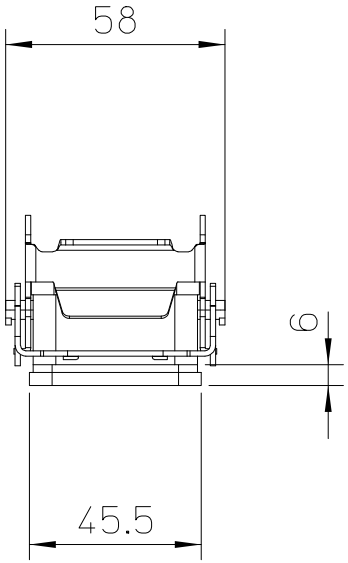

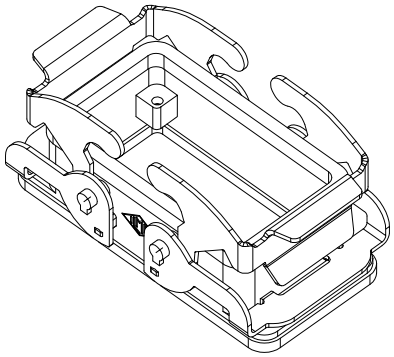

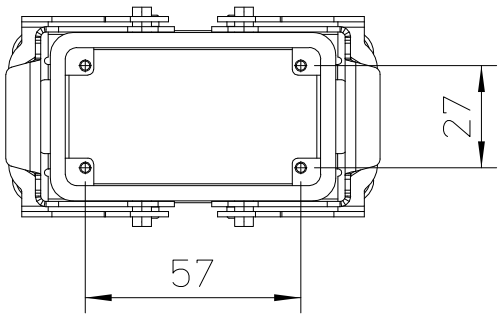

Panel cut out - scala 1:1

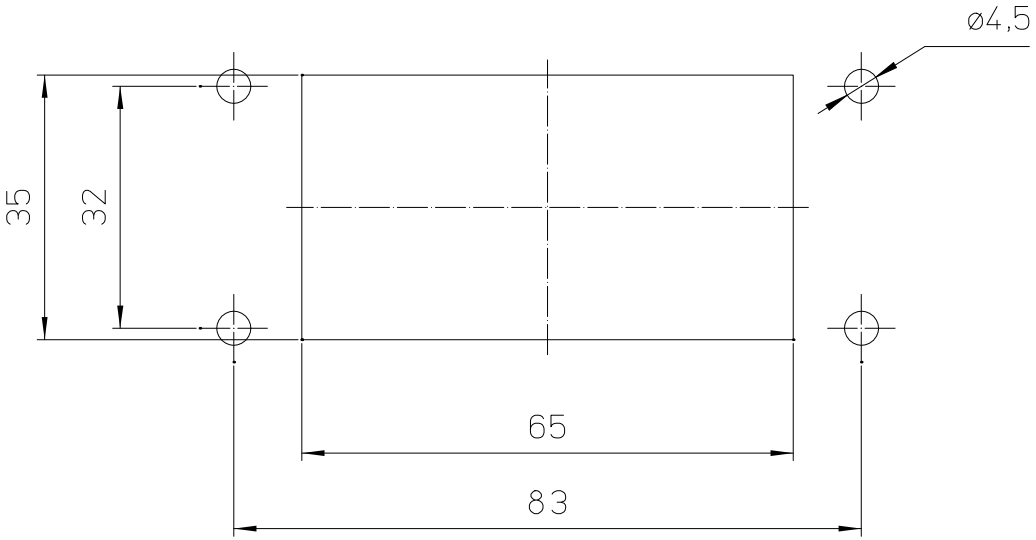

dimensions in mm	C7IE 10	Scale
Date 16/11/16	Bulkhead housing, 2 levers - EXTREME	1:2
Sign. C. Mainini		