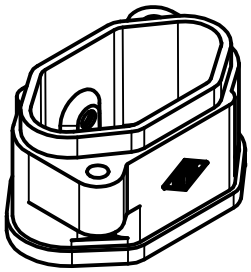

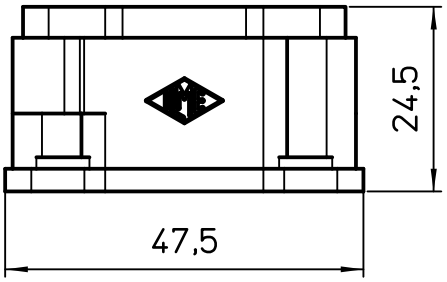

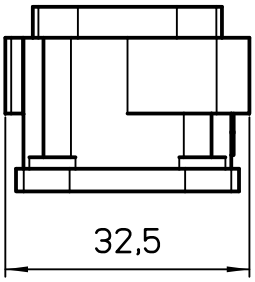

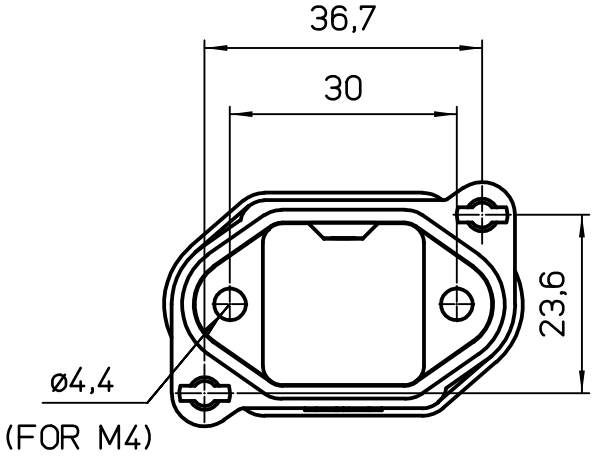

All rights reserved
Diritti riservati

dimensions in mm	CGK I B	Scale
Date 08/04/14	Metal bulkhead housing, IP68, bayonet type	1:1
Sign. Radice		