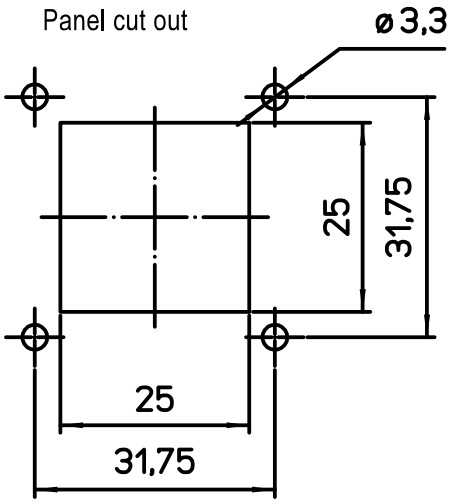

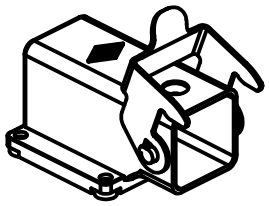

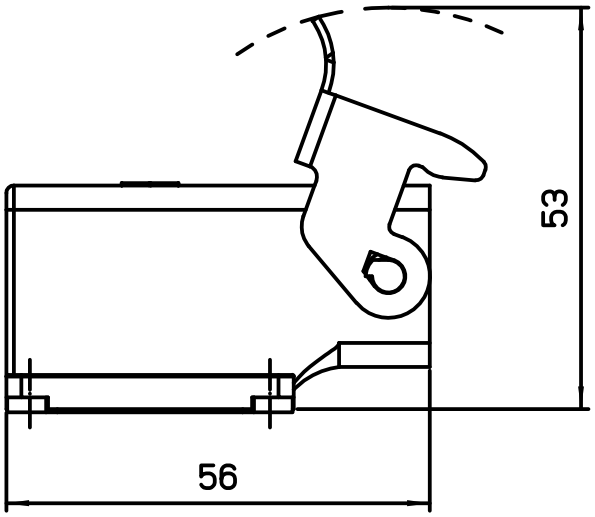

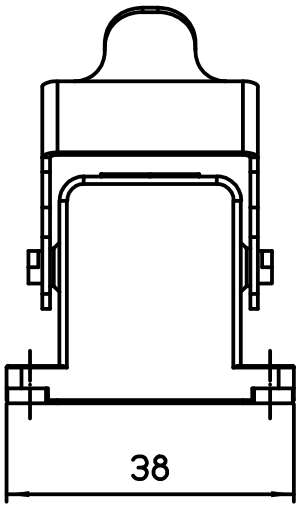

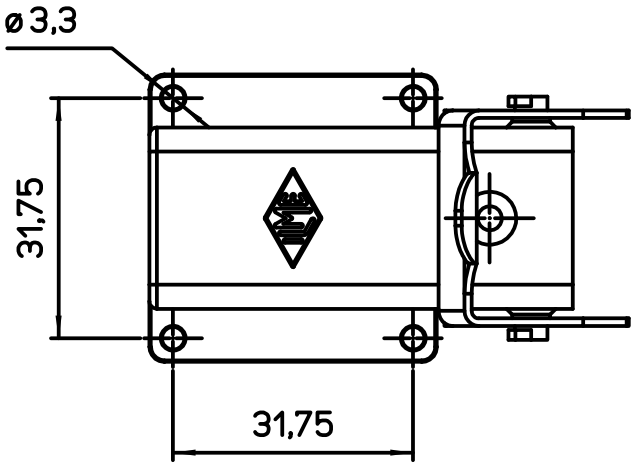

All rights reserved
Diritti riservati

dimensions in mm	CKAXX 03 IA4	Scale	
Date 12/09/17	Metal angled bulkhead housing, stainless steel lever	1:1	
Sign. Radice			