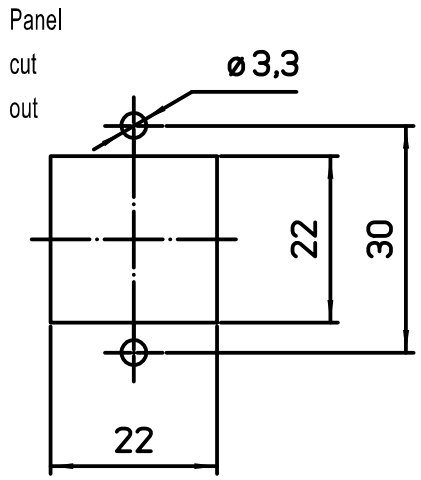

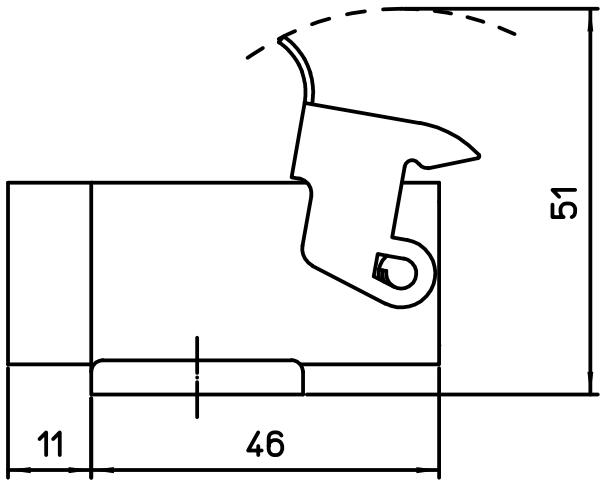

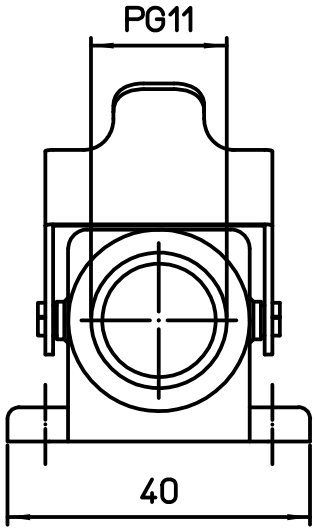

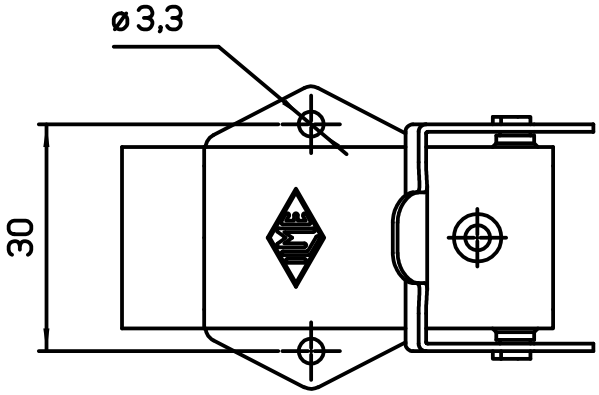

Diritti riservati All rights reserved

dimensions in mm	CKA 03 APS	Scale
Date 11/12/19	Metal angled bulkhead housing, galvanized steel lever, PG11	1:1
Sign. Radice		