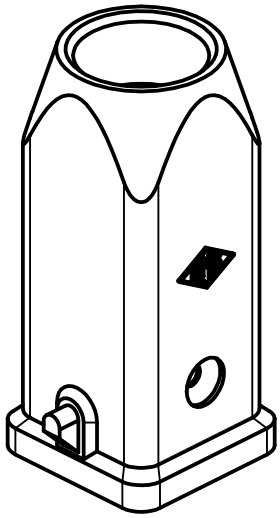

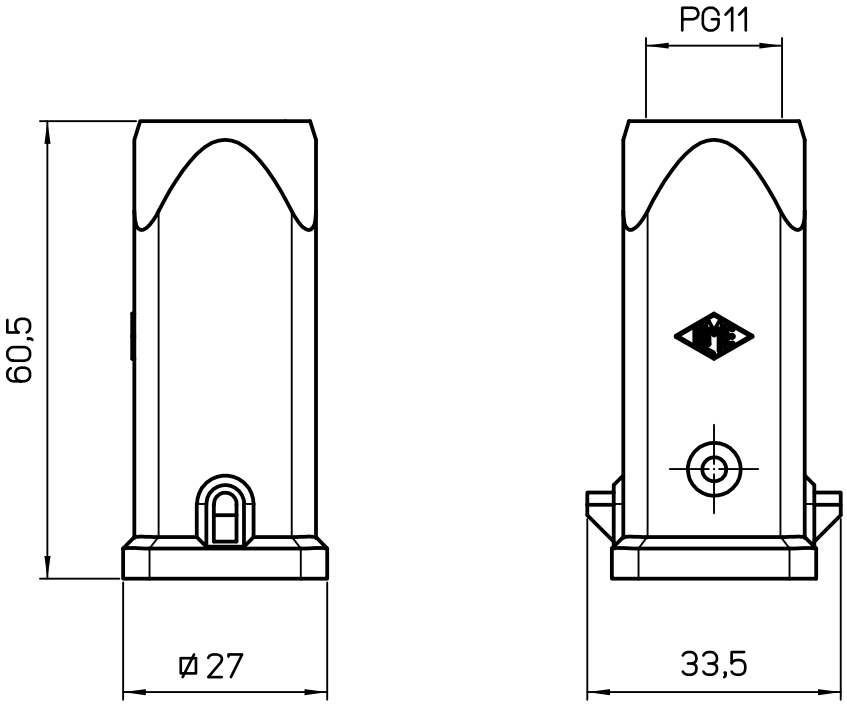

Diritti riservati All rights reserved

dimensions in mm	CKA 03 VS	Scale
Date 28/01/14	Metal hood top entry PG11	1:1
Sign. Radice		