Diritti riservati All rights reserved

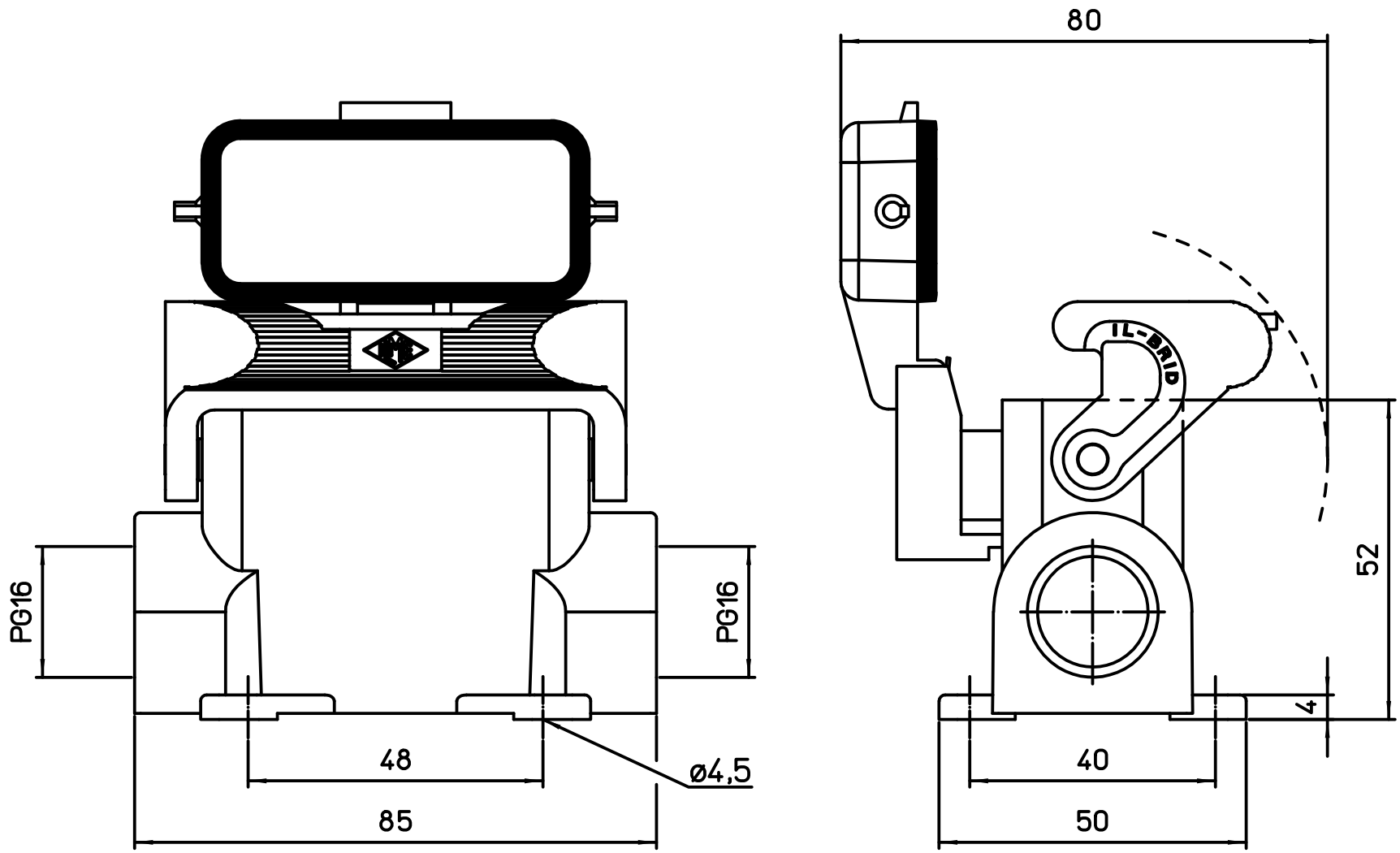

dimensions in mm	
Date 16/11/18	
Sign. D.Cominelli	

CZP 15 LS2

Surface mounting housing with single lever and cover, 2xPG16

Scale 1:1