Diritti riservati All rights reserved

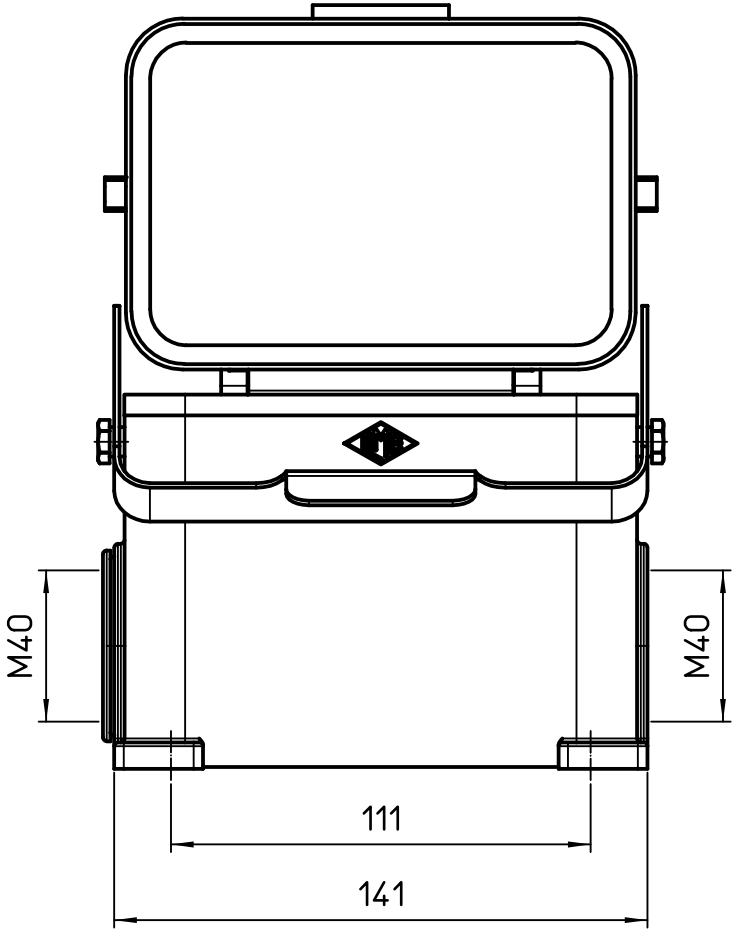

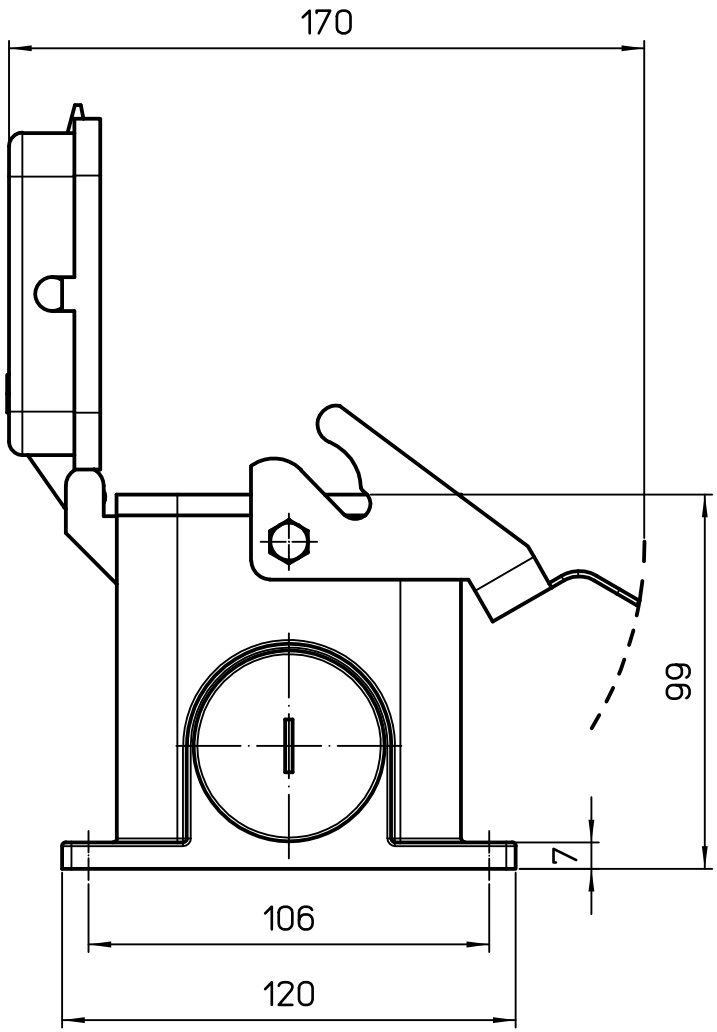

dimensions in mm	JMHP 48 LP40	Scale	
Date 28/01/14	Surface mounting housing, 1 lever + plastic cover 2xM40 -JEI-	1:2	
Sign. Radice			