Diritti riservati All rights reserved

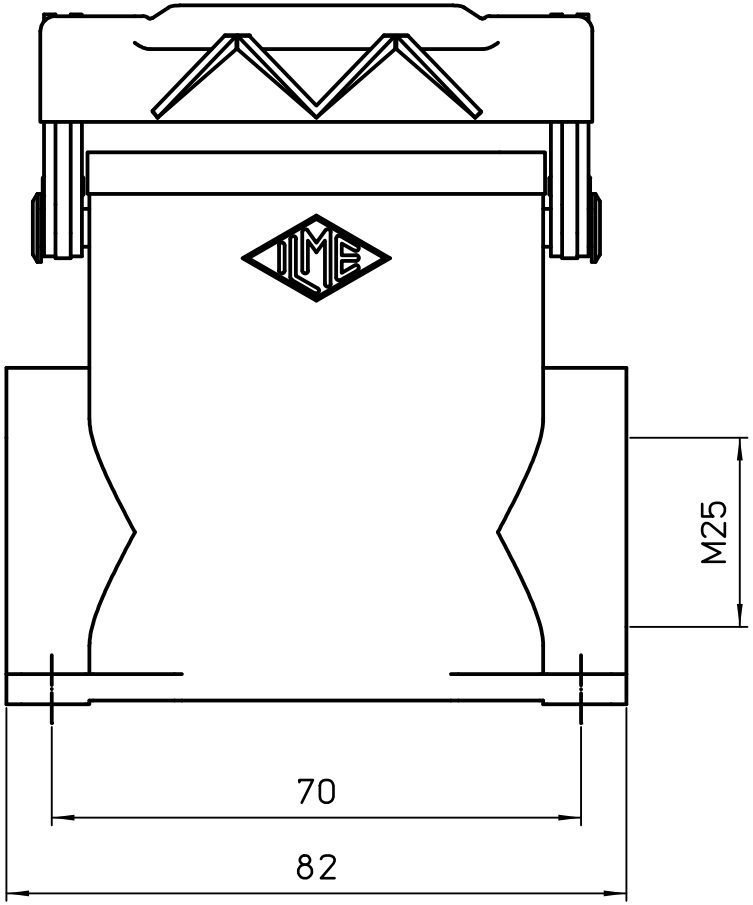

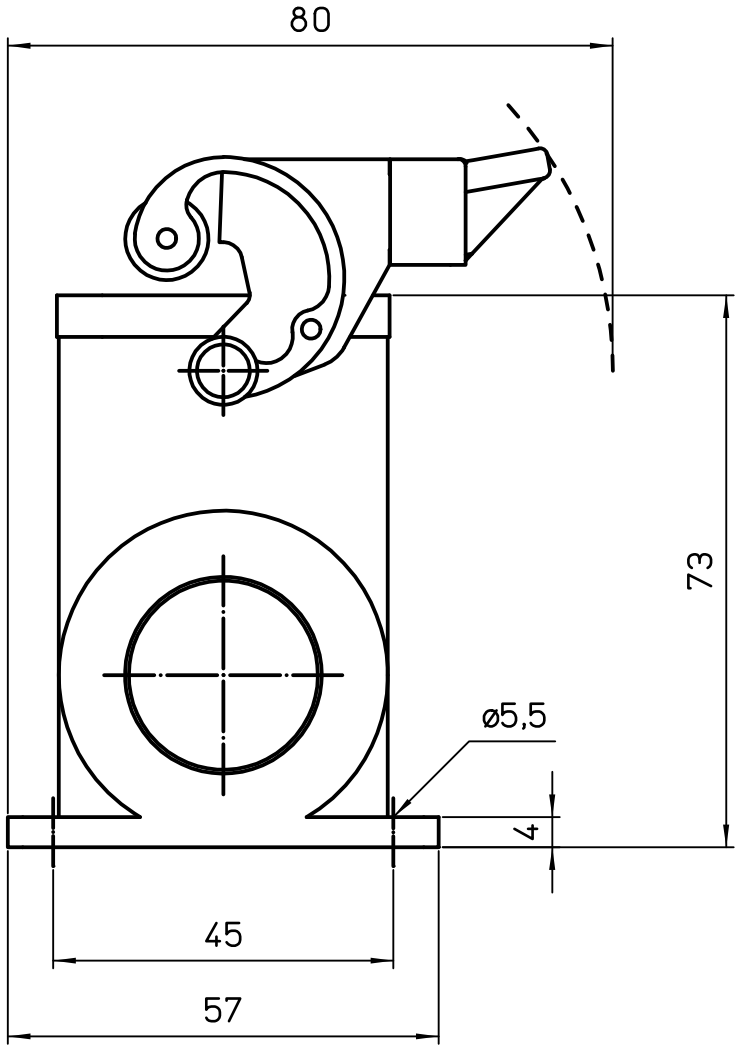

dimensions in mm	MAP 06 L25	Scale
Date 20/05/16	Surface mounting housing 1 lev. M25	1:1
Sign. D. Bonino		