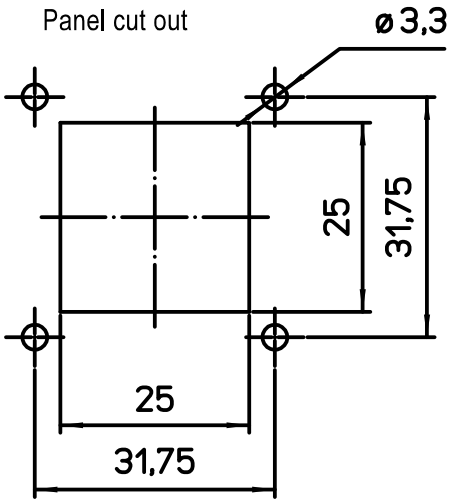

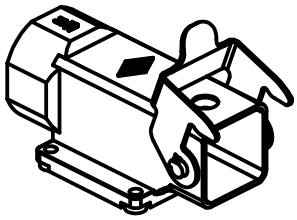

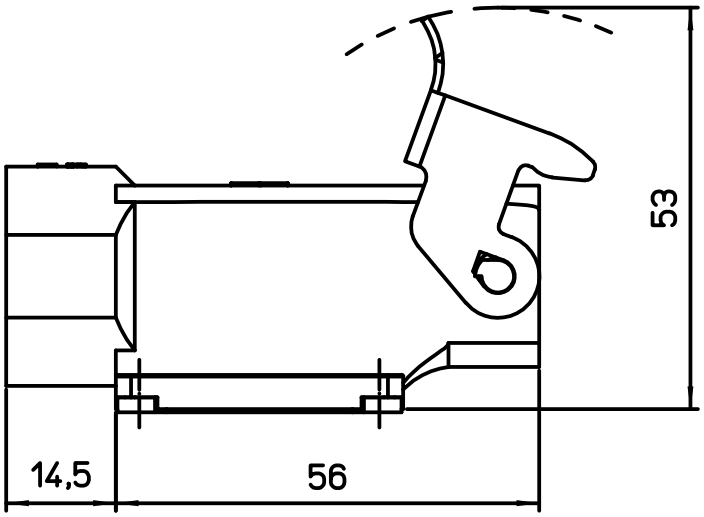

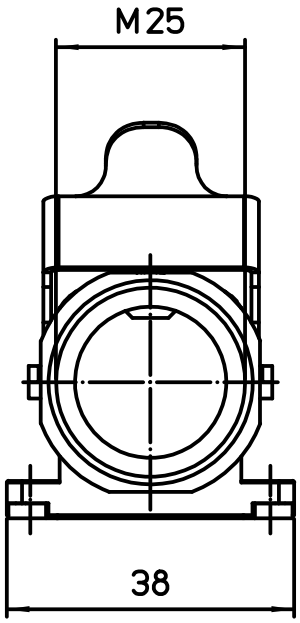

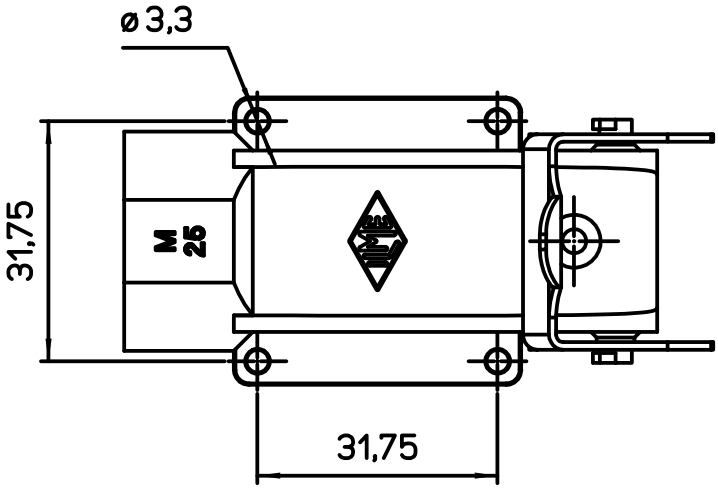

All rights reserved
Diritti riservati

dimensions in mm	MKAS IAP25	Scale	
Date 12/09/17	Metal angled bulkhead housing, galvanized steel lever, M25 - EMC	1:1	ILME
Sign. Radice			