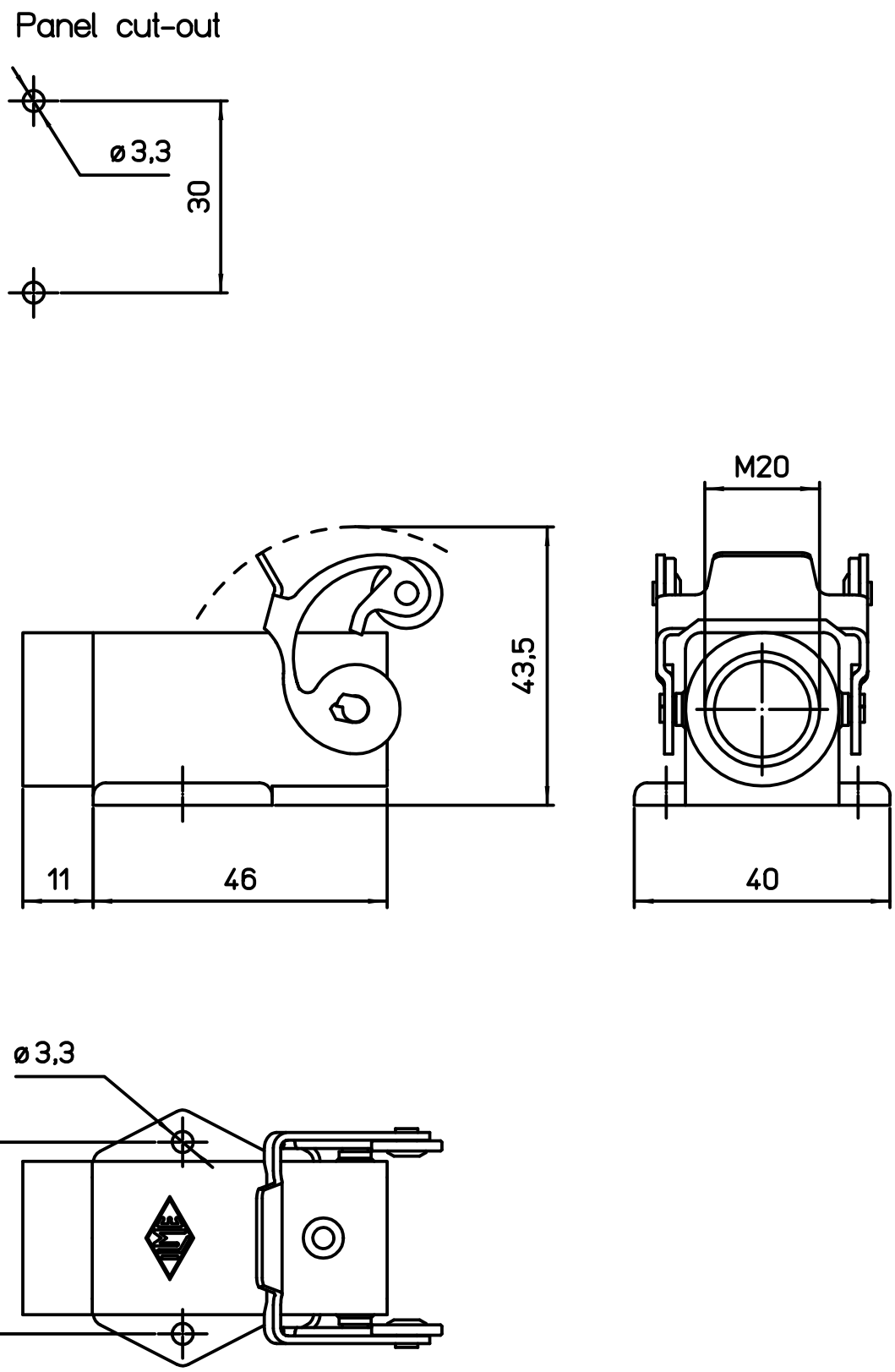

Diritti riservati All rights reserved

dimensions in mm	MKAX AP20	Scale
Date 04/08/20	Metal angled bulkhead housing, stainless steel lever, M20	1:1
Sign. D.Cominelli		