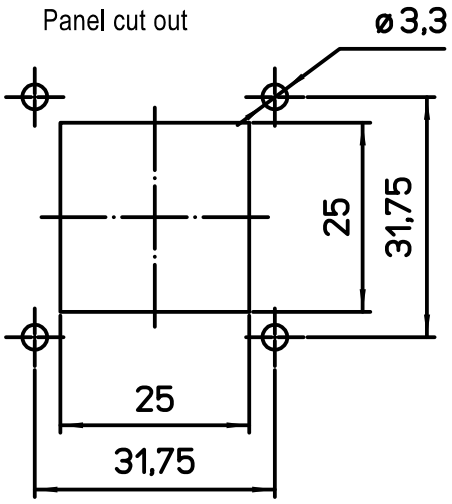

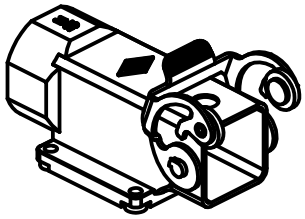

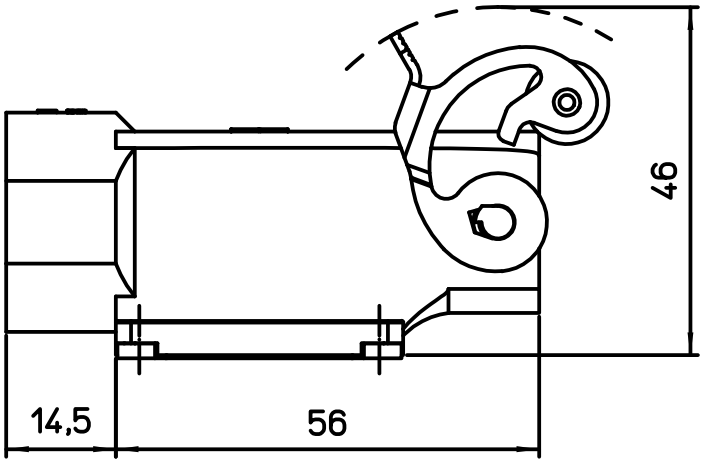

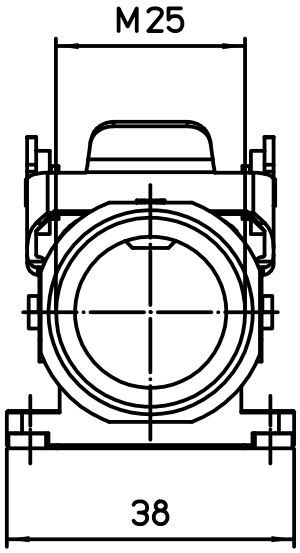

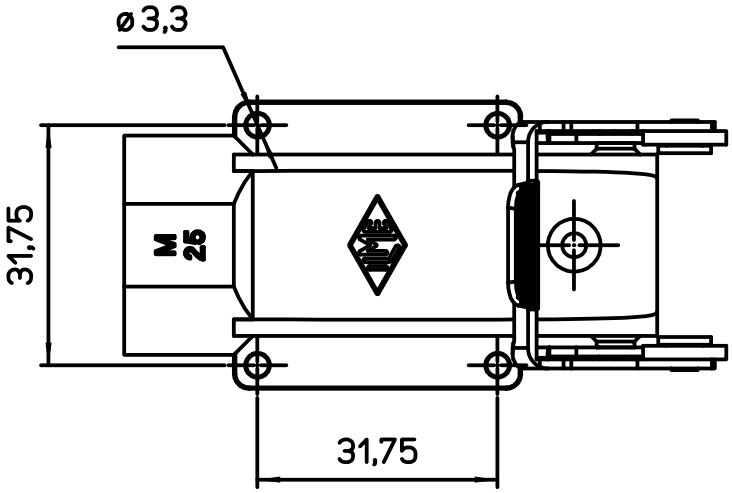

Diritti riservati All rights reserved

dimensions in mm	MKAXS IAP25	Scale	
Date 12/09/17	Metal angled bulkhead housing, stainless steel lever, M25 - EMC	1:1	
Sign. Radice			