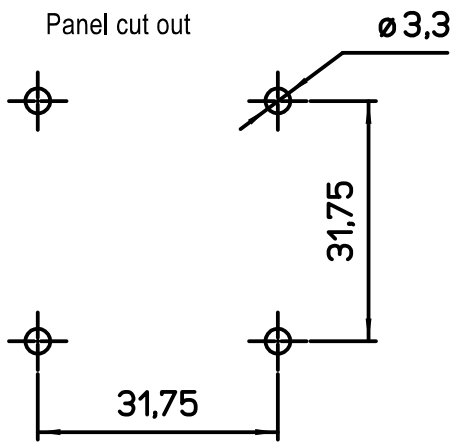

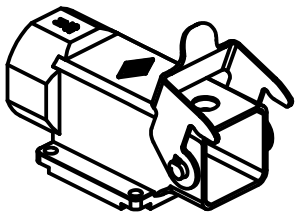

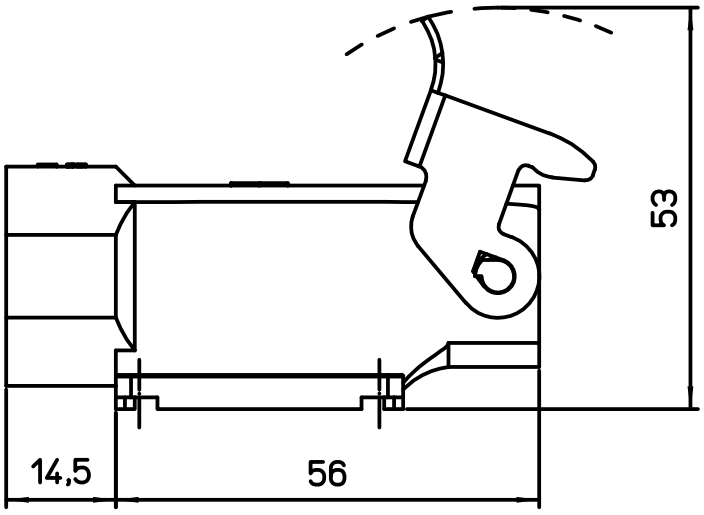

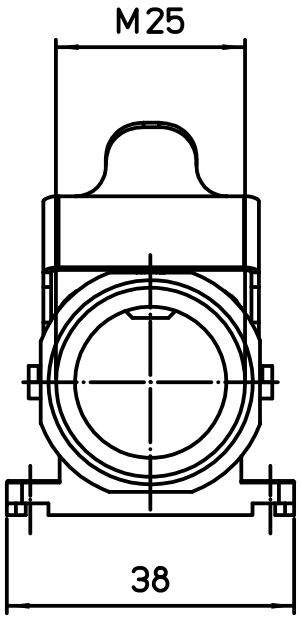

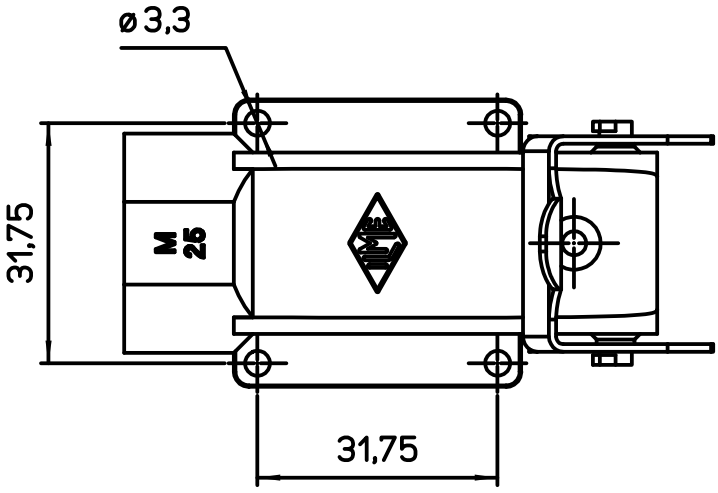

All rights reserved
Diritti riservati

dimensions in mm	MKAXXS AP25	Scale	
Date 12/09/17	Metal angled bulkhead housing, stainless steel lever, M25 - EMC	1:1	
Sign. Radice			