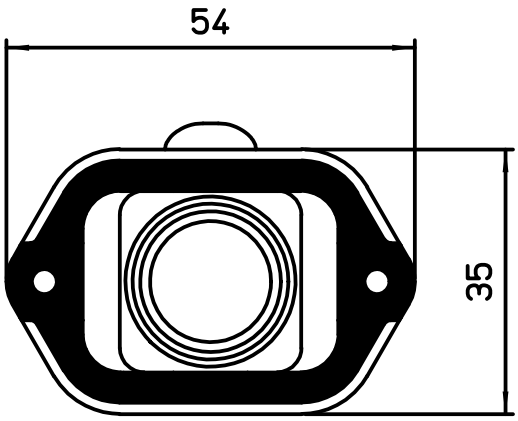

Panel cut-out

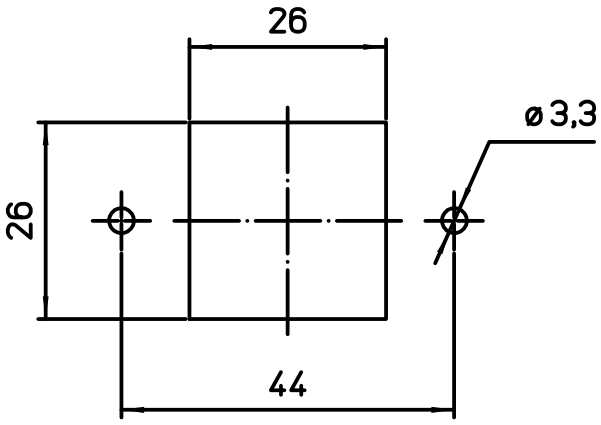

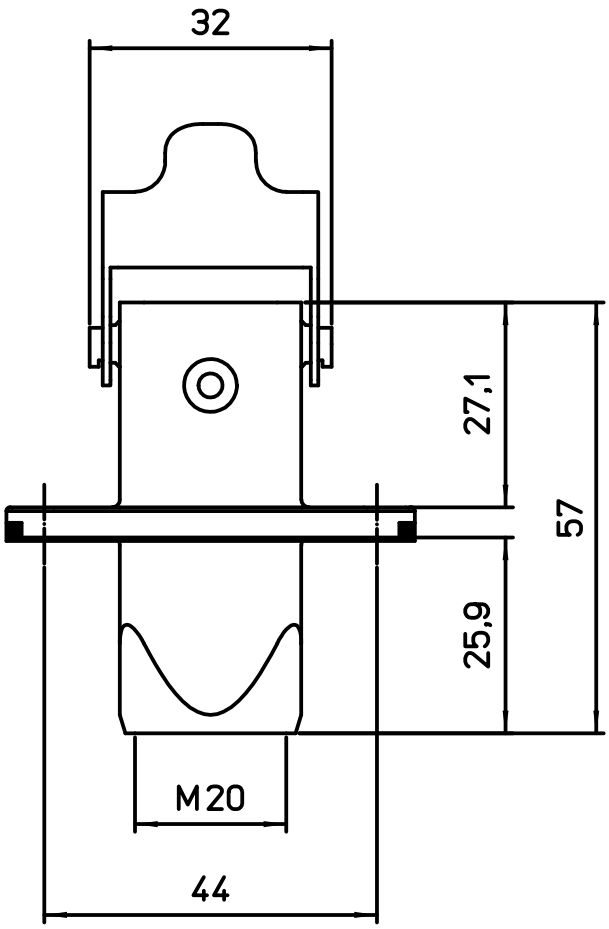

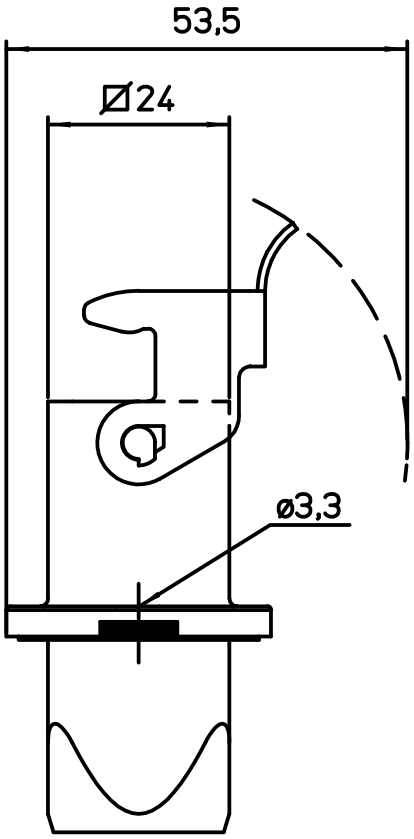

Diritti riservati All rights reserved

dimensions in mm	MKAXXS IVG20	Scale
Date 26/09/18	Flanged metal hood, stainless steel rigid lever, top entry M20 - EMC	1:1
Sign. D.Cominelli		