Part number

CCMA 0.3

Male crimp contact, CC series, 16 A, turned silver plated, wire cross section 0,14 - 0,37 mm², AWG 26 - 22

Product description	
Product type	Crimp contact
Series	CC
Gender	Male
Technical data	
Current	16 A
Wire cross-section	0,14 mm² - 0,37 mm²
AWG size	26 - 22
Contact type	Turned silver plated
Further technical details	
Weight	1,30 g
Conductors stripping length	7,5 mm

Material properties	
Main material	Copper alloy
RoHs conformity	Compliant with exemption 6(c): copper alloy containing up to 4% lead by weight
China RoHs - EFUP	50
REACH SVHC substances	Yes Lead
SCIP number	C0979fba-9907-458f-a94a-db781440f273
Approvals / Standards	
Certifications	CSA, EAC
UL	ECBT2
General ordering information	
EAN13 code	8015747170963
eCl@ss 8.1	27440204
ETIM 7.0	EC000796
Packaging Information	
Packaging length	112,00 mm
Packaging height	95,00 mm
Packaging width	117,00 mm
Packaging weight	1,27 kg
Packaging volume	1,24 dm³
Packaging description	Carton box
Packaging quantity	800 Pcs
Packaging EAN code	8015747171014
Sub-packaging length	50,00 mm
Sub-packaging height	44,00 mm
Sub-packaging width	50,00 mm
Sub-packaging weight	0,16 kg
Sub-packaging volume	0,11 dm³
Sub-packaging description	Plastic box
Sub-packaging quantity	100 Pcs
Sub-packaging EAN barcode	8015747171021

Part number

CCMA 0.3

Catalogue drawings

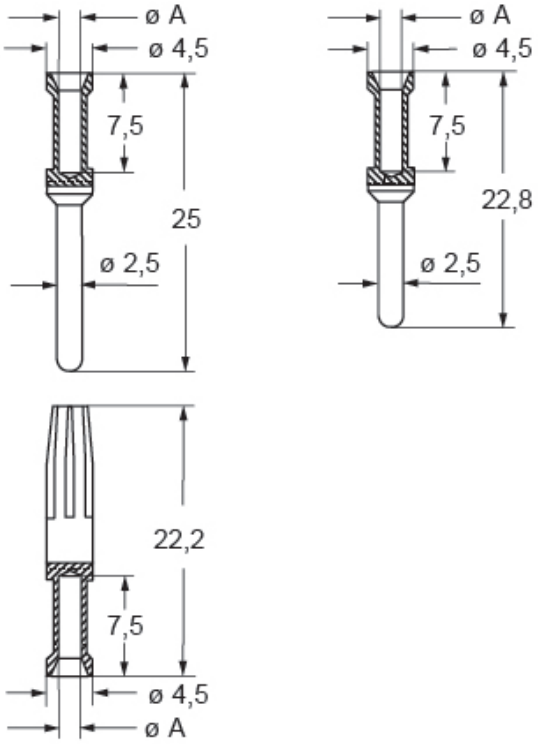

CCF, CCM and CC..AN contacts

conductor section mm²	conductor slot ø A (mm)	conductors stripping length (mm)
0,14-0,37	0,9	7,5
0,5	1,1	7,5
0,75	1,3	7,5
1,0	1,45	7,5
1,5	1,8	7,5
2,5	2,2	7,5
3	2,55	7,5
4	2,85	7,5

Notes

Dimensions shown in mm are not binding and may be changed without notice.

California Proposition 65 Information

WARNING

This product can expose you to lead and its compounds, known to the State of California to cause cancer and/or reproductive toxicity. For more information go to www.P65Warnings.ca.gov.