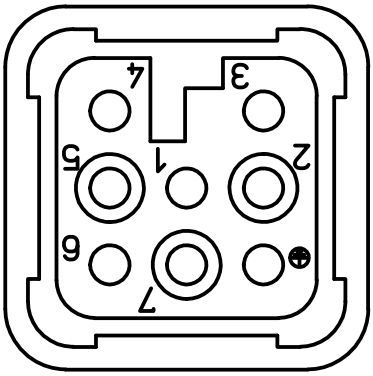

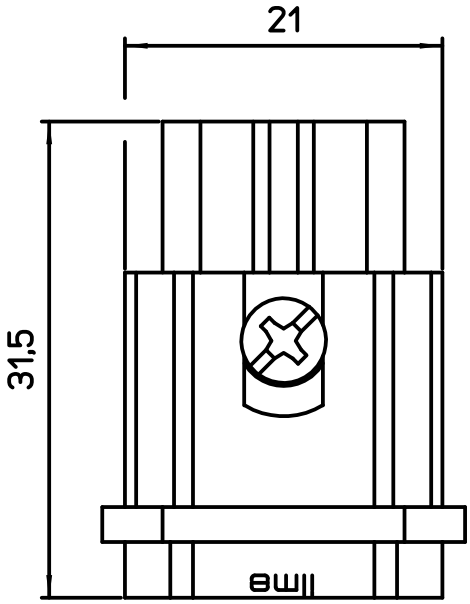

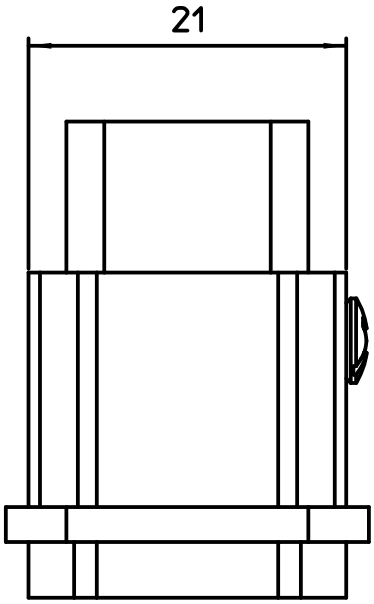

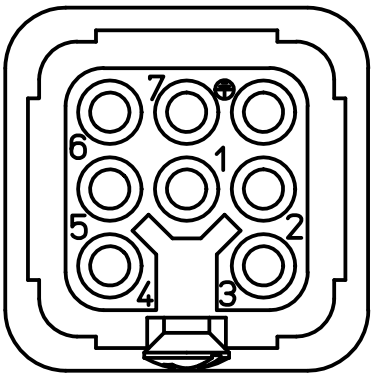

Diritti riservati All rights reserved

dimensions in mm	CDM 07 N	Scale
Date 15/07/16	Male insert, crimp, 07P 10A 250V.	2:1
Sign. D. Bonino		