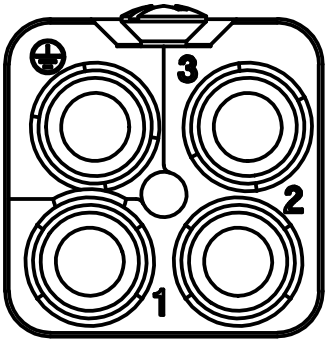

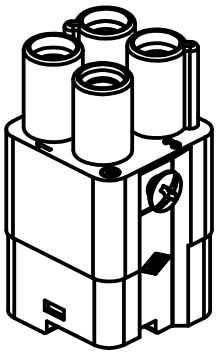

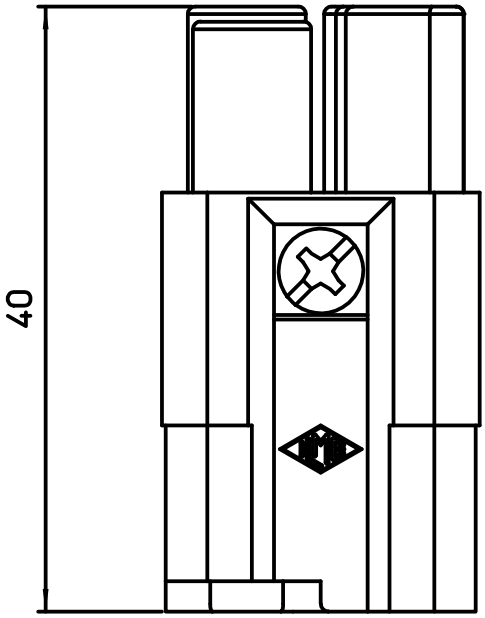

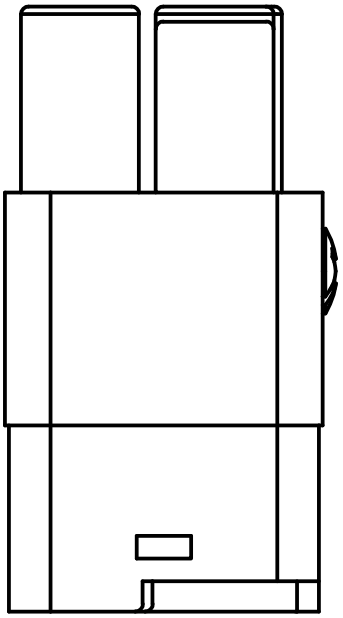

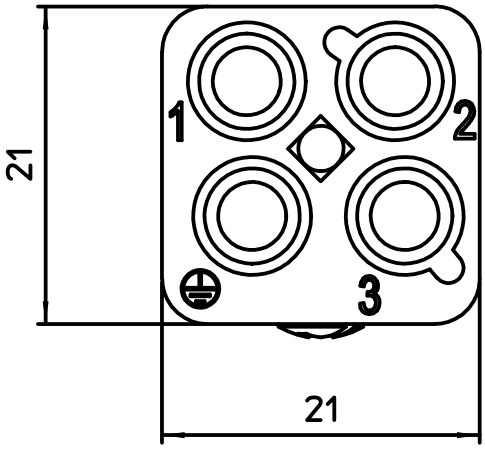

Diritti riservati All rights reserved

dimensions in mm	CQ4F 03	Scale
Date 05/11/15	female insert crimp 3P+⏚ 40A 400V 6kV 3	2:1
Sign. T.Tedeschi		