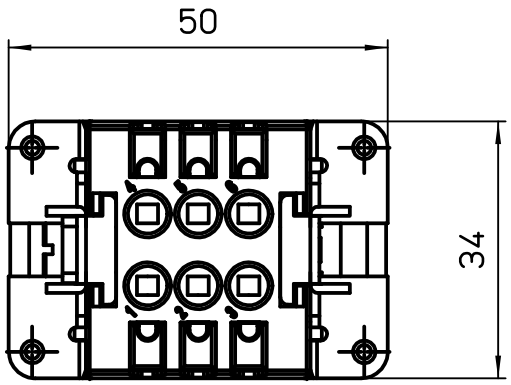

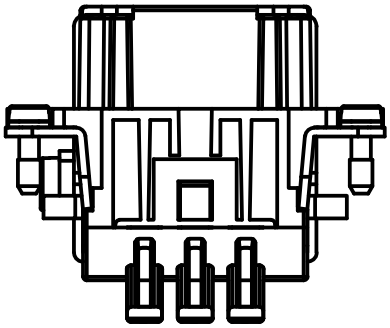

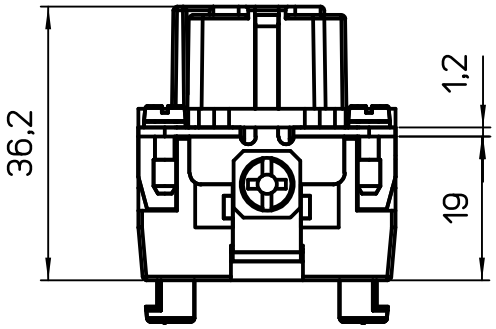

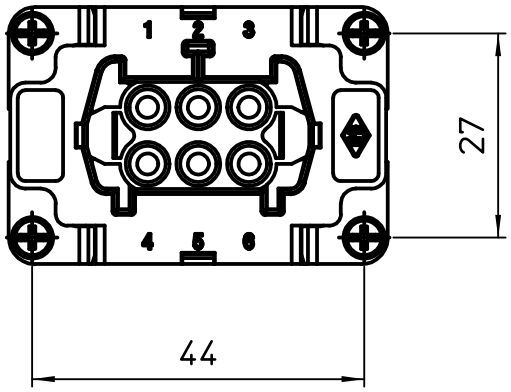

All rights reserved
Diritti riservati

dimensions in mm	CSHF 06 SQUICH female insert, spring, 06P 16A 500V	Scale 1:1
Date 05/11/13		
Sign. Radice		