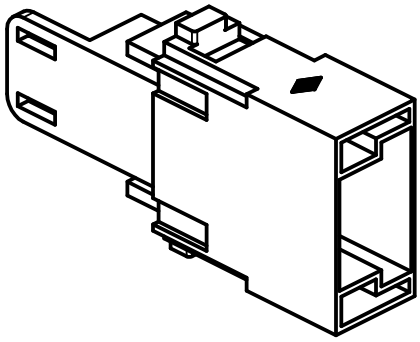

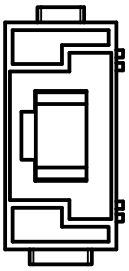

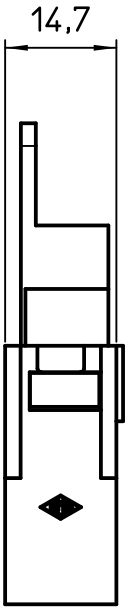

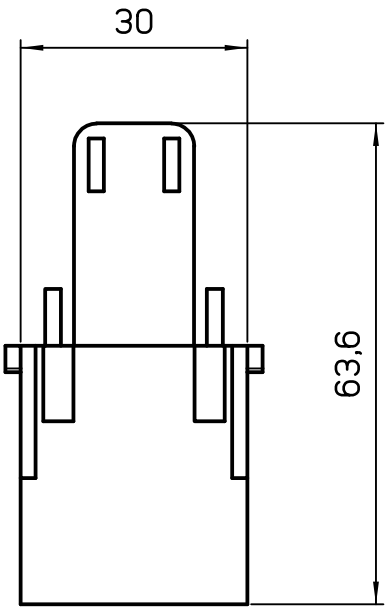

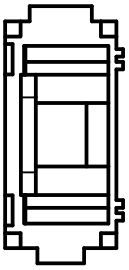

Diritti riservati All rights reserved

dimensions in mm	CX 01 J8IM	Scale
Date 27/01/14	Male modular, IDC, RJ45 Cat.6	1:1
Sign. Radice		