TBB SERIES

AL/CU MAIN BRANCH TERMINALS

TBB series main line branch terminals are the top choice for connecting main supply conductors.

Their advanced brass body design minimizes costs, while simplified screw mounting shortens installation time.

The halogen-free, self-extinguishing plastic casing enhances safety. Identical designs in the 25 mm² and 35 mm² variants allow effortless stacking and combinations.

The TBB series is compatible with solid, stranded, and flexible copper or aluminum conductors—made possible by a specialized triple coating on the brass body.



PRODUCT BENEFITS

Compatible with all round and sector-shaped solid, stranded, or flexible copper and aluminum conductors.

Cost-efficient design featuring an optimized brass body and an ultra-compact form.

Built with a halogen-free, self-extinguishing plastic enclosure for improved safety.

STANDARDS

> IEC 60947-7-1

CONFORMITY

CE RoHS REACH

CODE KEY

TBB 1 - 2516 - 1

- TBB: Terminal Block Brass
- 1: Number of Pole
- 2516: Cross Sections
- 1: Color Code

TBB SERIES

Applications

Metering Cabinets



Junction Boxes



Solar Panels



EV Charger Units

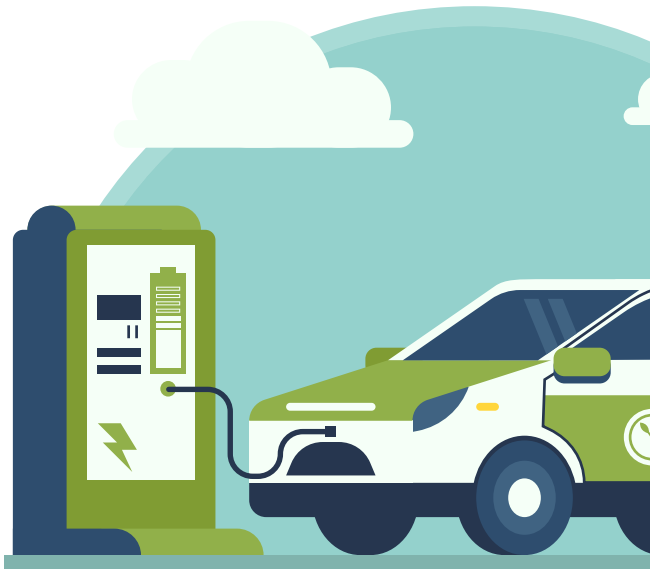

TBB SERIES



2x16 mm², 2x25 mm²

Cover Colour	Code	Number of Pole	Cross Section (max) Per Pole	Torque	Nominal Current (A)	Nominal Voltage (V)	Box/Carton (pcs)	Weight (gr)
Grey	TBB 11625A1	1	2x16 mm² , 2x25 mm²	2,5-2 Nm	130 (Cu) , 100 (A)	1000 V AC / DC	24/216	57
Blue	TBB 11625A2	1	2x16 mm² , 2x25 mm²	2,5-2 Nm	130 (Cu) , 100 (A)	1000 V AC / DC	24/216	57
Green	TBB 11625A3	1	2x16 mm² , 2x25 mm²	2,5-2 Nm	130 (Cu) , 100 (A)	1000 V AC / DC	24/216	57
Brown	TBB 11625A4	1	2x16 mm² , 2x25 mm²	2,5-2 Nm	130 (Cu) , 100 (A)	1000 V AC / DC	24/216	57
Black	TBB 11625A5	1	2x16 mm² , 2x25 mm²	2,5-2 Nm	130 (Cu) , 100 (A)	1000 V AC / DC	24/216	57
Red	TBB 11625A6	1	2x16 mm² , 2x25 mm²	2,5-2 Nm	130 (Cu) , 100 (A)	1000 V AC / DC	24/216	57

Conductor cross section Cu /Al (mm²) 1,5 - 25



2x25 mm², 2x25 mm²

Cover Colour	Code	Number of Pole	Cross Section (max) Per Pole	Torque	Nominal Current (A)	Nominal Voltage (V)	Box/Carton (pcs)	Weight (gr)
Grey	TBB 12525A1	1	2x25 mm² , 2x25 mm²	2,5-2 Nm	130 (Cu) , 100 (A)	1000 V AC / DC	24/216	53
Blue	TBB 12525A2	1	2x25 mm² , 2x25 mm²	2,5-2 Nm	130 (Cu) , 100 (A)	1000 V AC / DC	24/216	53
Green	TBB 12525A3	1	2x25 mm² , 2x25 mm²	2,5-2 Nm	130 (Cu) , 100 (A)	1000 V AC / DC	24/216	53
Brown	TBB 12525A4	1	2x25 mm² , 2x25 mm²	2,5-2 Nm	130 (Cu) , 100 (A)	1000 V AC / DC	24/216	53
Black	TBB 12525A5	1	2x25 mm² , 2x25 mm²	2,5-2 Nm	130 (Cu) , 100 (A)	1000 V AC / DC	24/216	53
Red	TBB 12525A6	1	2x25 mm² , 2x25 mm²	2,5-2 Nm	130 (Cu) , 100 (A)	1000 V AC / DC	24/216	53

Conductor cross section Cu /Al (mm²) 1,5 - 25



2x35 mm², 2x25 mm²

Cover Colour	Code	Number of Pole	Cross Section (max) Per Pole	Torque	Nominal Current (A)	Nominal Voltage (V)	Box/Carton (pcs)	Weight (gr)
Grey	TBB 13525A1	1	2x35 mm² , 2x25 mm²	2,5-3 Nm	160 (Cu) , 125 (A)	1000 V AC / DC	24/216	50
Blue	TBB 13525A2	1	2x35 mm² , 2x25 mm²	2,5-3 Nm	160 (Cu) , 125 (A)	1000 V AC / DC	24/216	50
Green	TBB 13525A3	1	2x35 mm² , 2x25 mm²	2,5-3 Nm	160 (Cu) , 125 (A)	1000 V AC / DC	24/216	50
Brown	TBB 13525A4	1	2x35 mm² , 2x25 mm²	2,5-3 Nm	160 (Cu) , 125 (A)	1000 V AC / DC	24/216	50
Black	TBB 13525A5	1	2x35 mm² , 2x25 mm²	2,5-3 Nm	160 (Cu) , 125 (A)	1000 V AC / DC	24/216	50
Red	TBB 13525A6	1	2x35 mm² , 2x25 mm²	2,5-3 Nm	160 (Cu) , 125 (A)	1000 V AC / DC	24/216	50

Conductor cross section Cu /Al (mm²) 1,5 - 35

DIMENSIONS

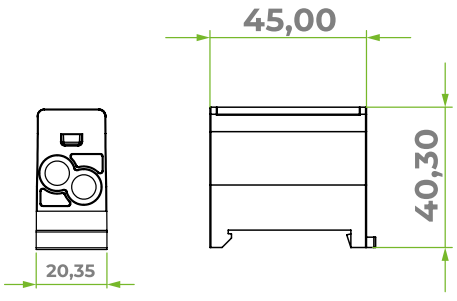

TBB SERIES



2x16 mm², 2x25 mm²

Cover Colour	Code	Number of Pole	Cross Section (max) Per Pole	Torque	Nominal Current (A)	Nominal Voltage (V)	Box/Carton (pcs)	Weight (gr)
	TBB 51625A1	5	2x16 mm², 2x25 mm²	2,5-2 Nm	130 (Cu) , 100 (Al)	1000 V AC / DC	1/50	295 gr.
	TBB 51625A2	5	2x16 mm², 2x25 mm²	2,5-2 Nm	130 (Cu) , 100 (Al)	1000 V AC / DC	1/50	295 gr.
	TBB 51625A3	5	2x16 mm², 2x25 mm²	2,5-2 Nm	130 (Cu) , 100 (Al)	1000 V AC / DC	1/50	295 gr.

Conductor cross section Cu /Al (mm²) 1,5 - 25

2x25 mm², 2x25 mm²

Cover Colour	Code	Number of Pole	Cross Section (max) Per Pole	Torque	Nominal Current (A)	Nominal Voltage (V)	Box/Carton (pcs)	Weight (gr)
	TBB 52525A1	5	2x25 mm² , 2x25 mm²	2,5-2 Nm	130 (Cu) , 100 (Al)	1000 V AC / DC	1/50	275 gr.
	TBB 52525A2	5	2x25 mm² , 2x25 mm²	2,5-2 Nm	130 (Cu) , 100 (Al)	1000 V AC / DC	1/50	275 gr.
	TBB 52525A3	5	2x25 mm² , 2x25 mm²	2,5-2 Nm	130 (Cu) , 100 (Al)	1000 V AC / DC	1/50	275 gr.

Conductor cross section Cu /Al (mm²) 1,5 - 25

2x35 mm², 2x25 mm²

Cover Colour	Code	Number of Pole	Cross Section (max) Per Pole	Torque	Nominal Current (A)	Nominal Voltage (V)	Box/Carton (pcs)	Weight (gr)
	TBB 53525A1	5	2x35 mm² , 2x25 mm²	2,5-3 Nm	160 (Cu) , 125 (Al)	1000 V AC / DC	1/50	260 gr.
	TBB 53525A2	5	2x35 mm² , 2x25 mm²	2,5-3 Nm	160 (Cu) , 125 (Al)	1000 V AC / DC	1/50	260 gr.
	TBB 53525A3	5	2x35 mm² , 2x25 mm²	2,5-3 Nm	160 (Cu) , 125 (Al)	1000 V AC / DC	1/50	260 gr.

Conductor cross section Cu /Al (mm²) 1,5 - 35

DIMENSIONS

