CVE15S

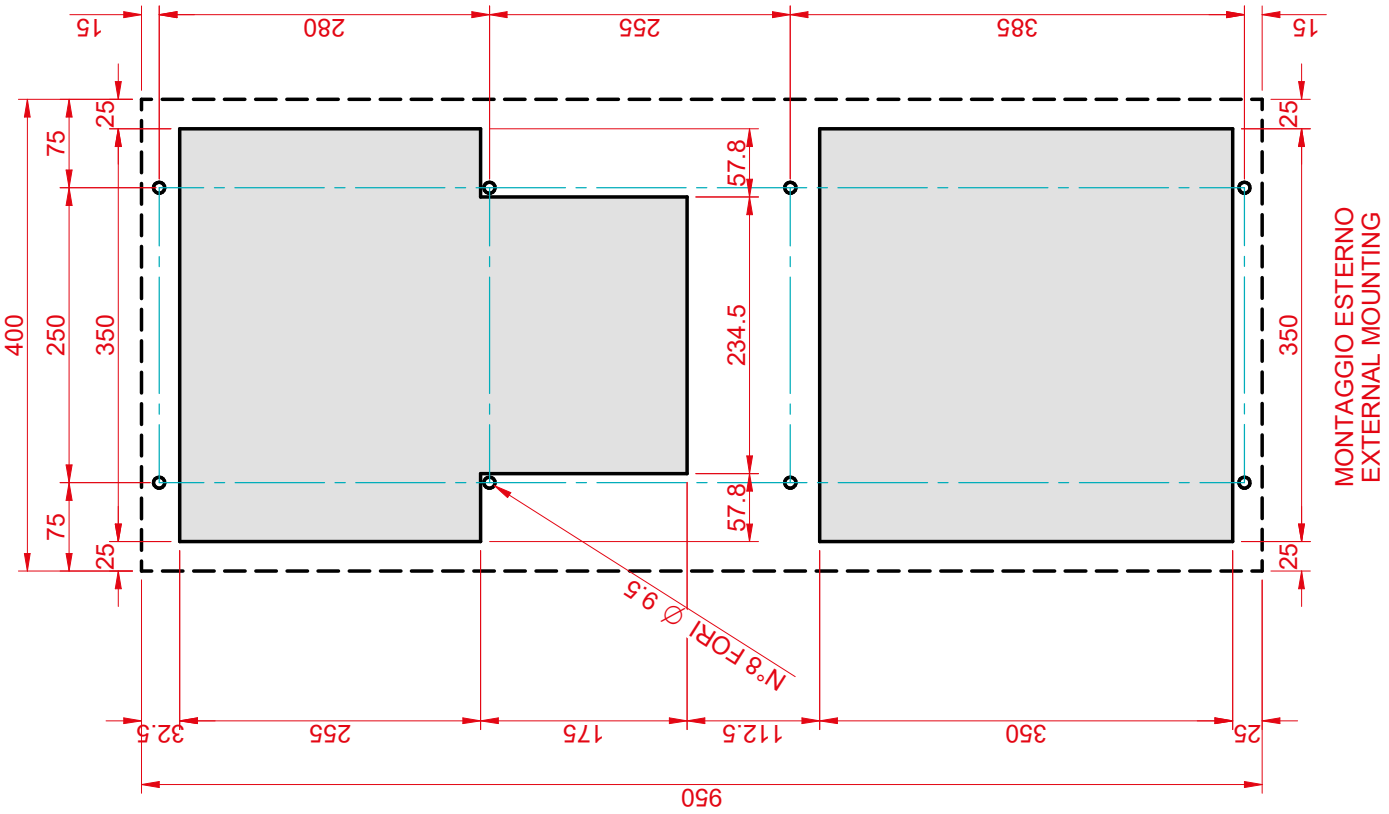
15
280
255
385
15
25
75
400
250
350
75
25
57.8
234.5
57.8
25
350
25
N°8 FORI Ø 9.5
32.5
255
175
112.5
350
25
950
MONTAGGIO ESTERNO
EXTERNAL MOUNTING

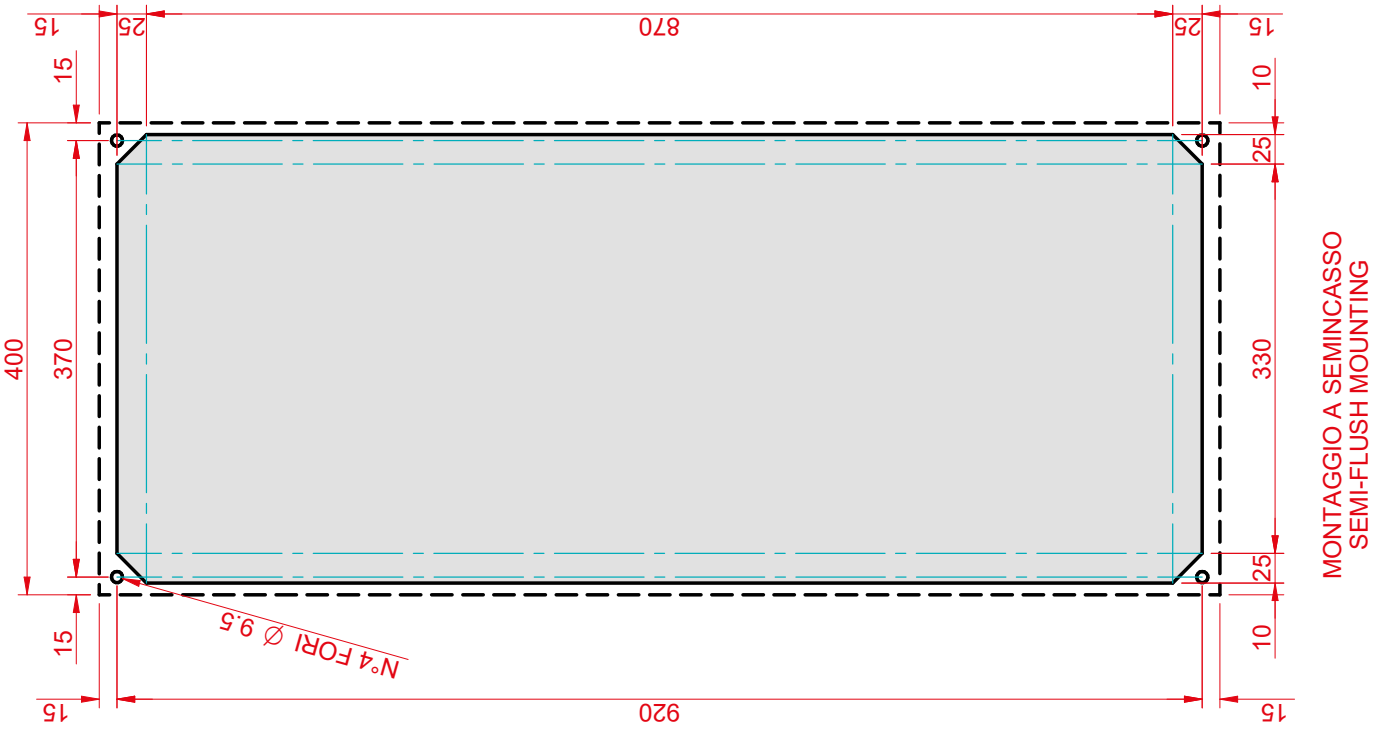
15
25
870
25
15
15
10
400
370
25
330
25
15
10
N°4 FORI Ø 9.5
15
920
15
MONTAGGIO A SEMINCASSO
SEMI-FLUSH MOUNTING