# Cut-Out
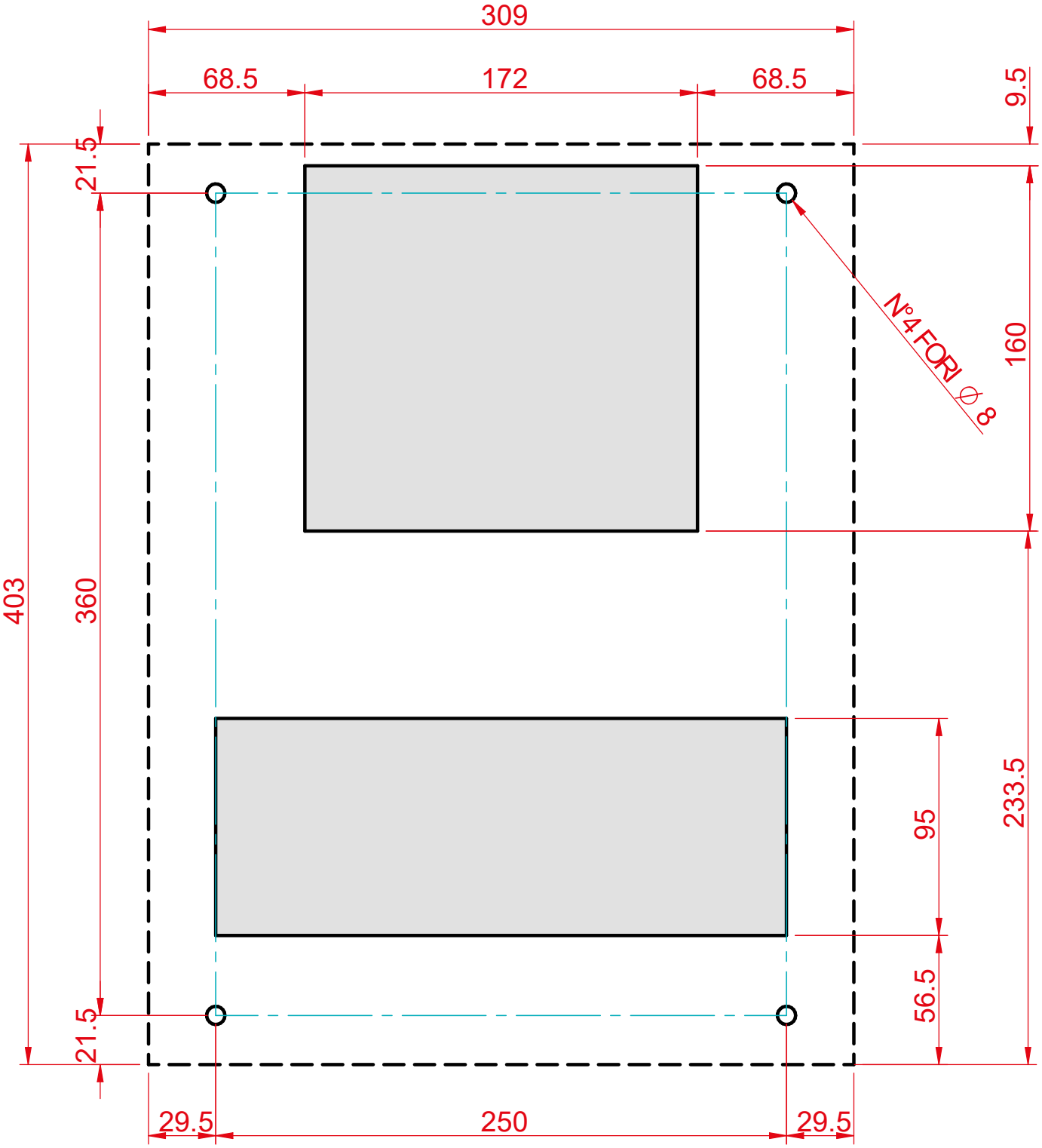
## EXW06