## ⚠ Safety Precautions

- Important Notes on exporting this product or equipment containing this product;
  If the end-user or application of this product is related to military affairs or weapons, its export may be controlled by “Foreign Exchange and Foreign Trade Control Law” of Japan where export license will be required before product can be exported from Japan.
- This product is designed and manufactured for use in General Purpose Industrial Equipment and it is not intended to be used in equipment or system that may cause personal injury or death.
- All servicing such as installation, wiring, operation, maintenance and etc., should be performed by qualified personnel only.
- Tighten mounting screws with an adequate torque by taking into consideration strength of the screws and the characteristics of material to which the product will be mounted. Over tightening can damage the screw and/or material; under tightening can result in loosening.
  *Example: apply 2.7 N·m – 3.3 N·m torque when tightening steel screw (M5) to steel surface.
- Install safety equipment to prevent serious accidents or loss that is expected in case of failure of this product.
- Consult us before using this product under such special conditions and environments as nuclear energy control, aerospace, transportation, medical equipment, various safety equipments or equipments which require a lesser air contamination.
- We have been making the best effort to ensure the highest quality of our products, however, some applications with exceptionally large external noise disturbance and static electricity, or failure in input power, wiring and components may result in unexpected action. It is highly recommended that you make a fail-safe design and secure the safety in the operative range.
- If the motor shaft is not electrically grounded, it may cause an electrolytic corrosion to the bearing, depending on the condition of the machine and its mounting environment, and may result in the bearing noise. Checking and verification by customer is required.
- Failure of this product depending on its content may generate smoke of about one cigarette. Take this into consideration when the application of the machine is clean room related.
- Please be careful when using the product in an environment with high concentrations of sulfur or sulfuric gases, as sulfuration can lead to disconnection from the chip resistor or a poor contact connection.
- Do not input a supply voltage which significantly exceeds the rated range to the power supply of this product. Failure to heed this caution may lead to damage of the internal parts, causing smoke and/or fire and other troubles.
- The user is responsible for matching between machine and components in terms of configuration, dimensions, life expectancy, characteristics, when installing the machine or changing specification of the machine. The user is also responsible for complying with applicable laws and regulations.
- Manufacturer’s warranty will be invalid if the product has been used outside its stated specifications.
- Component parts are subject to minor change to improve performance.
- Read and observe the instruction manual to ensure correct use of the product.

| | |
|---|---|
| **Repair** | Consult to the dealer from whom you have purchased this product for details of repair work.<br>When the product is incorporated to the machine you have purchased, consult to the machine manufacturer or its dealer. |
| **URL** | Electronic data of this product (Instruction Manual, CAD data) can be downloaded from the following web site;<br><http://industrial.panasonic.com/ww/products/motors-compressors/fa-motors> |

Contact :

ISO 9001 — **ISO9001 Certificate division**

ISO 14001 — **ISO14001 Certificate division**


Panasonic Corporation,
Automotive & Industrial Systems Company,
Smart Factory Solutions Business Division,
Motor Business Unit
1-1 Morofuku 7-chome, Daito, Osaka 574-0044, Japan
Tel : +81-72-871-1212
Fax: +81-72-870-3151


**The contents of this catalog apply to the products as of April 2015.**

- This product is for industrial equipment. Don't use this product at general household.
- Printed colors may be slightly different from the actual products.
- Specifications and design of the products are subject to change without notice for the product improvement.

<15.04Ⓢ>

Panasonic

Brushless Motor 2015/04 Catalog


Brushless Motor <MINAS-BL GV series / KV series / GP series>

2015 / 4

# BRUSHLESS MOTOR

## GV series
## MINAS-BL KV series
## GP series

This product is for industrial equipment. Don't use this product at general household.

# Compact and high-efficiency brushless motors

# MINAS-BL

High-efficiency energy saving eco-friendly MINAS series* technology adopted more compact and higher-output brushless motors.

* MINAS series is a registered trademark for Panasonic AC servo motors.


•90 mm square 130 W


•60 mm square 200 W


•80 mm square 50 W

## MINAS-BL GV series

**Speed Control Type** 50 W to 130 W

**Typical options**

Console A

Digital key pad

**Power Supply DC 24 V Type**
•80 mm square 50 W only

GV series, input voltage 24 V type made to order item. Please contact us if you'd like detailed information

## MINAS-BL KV series

**Speed Control Type** 50 W to 750 W

**Typical options**

Console A

Digital key pad

## MINAS-BL GP series

**Position Control Type** 50 W to 130 W

**Typical options**

Digital key pad

## Contents

# Motor Business coexisting with Global Environment

**Panasonic Corporation, Automotive & Industrial Systems Company, Smart Factory Solutions Business Division,Motor Business Unit promotes preservation of the environment together with industrial activities and aims to "Company Coexisting with Global Environment"**

**Basic attitude**

Based on "Environmental Declaration" of Panasonic, Smart Factory Solutions Business Division, Motor Business Unit of Automotive & Industrial Systems Company also established the "Environmental Policy" as the basic attitude to environmental conservation. Based on this, we create more specific policies and manuals, and have been promoting environmental conservation activities.

**Environmental Policy**

Motor Business Unit of Smart Factory Solutions Business Division of Automotive & Industrial Systems Company of Panasonic Corporation recognizes that the preservation of global environment is the important mission as a good corporate citizen of society. Our philosophy is "Coexisting with the Global Environment", and run sound business activities harmonized with nature.

## Environmental conservation activities in industrial field

Environmental conservation activities have been required widely from home level to company level nowadays, and the role of conservation in the industrial sector has become more important. Total emissions of $CO_2$ in 2009 in Japan were approximately 1.1 billion tons, out of which 380 million tons belong to factory and industrial field.
It has become a huge amount which significantly exceeded transportation and business sectors.

**■$CO_2$ Emissions (2009)**

Source:$CO_2$ Inventory Office "Japan $CO_2$ emission data" (Units: million tons)

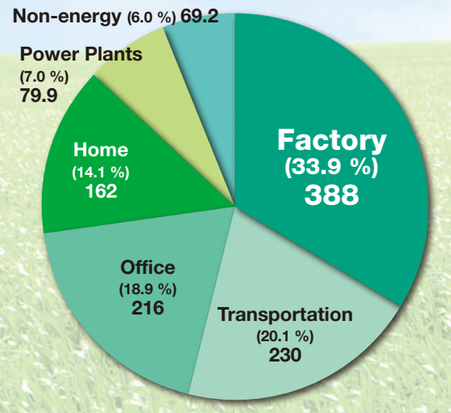


## Motor holds the key to global environmental protection

From small one used in mobile phones, to big one used in factories, motor has become indispensable in every aspect of our society. It has been consuming more than half part of electricity in Japan which is equal to 573 billion kWh.

If motor power consumption reduced by 1 % (4.59 billion kWh) → Equivalent to annual one thermal power plant stop (500K kWh×8760H)

**■Japan Domestic electricity consumption (2005)**

Source:Motor Business Unit Research (Units: Hundred million kWh)

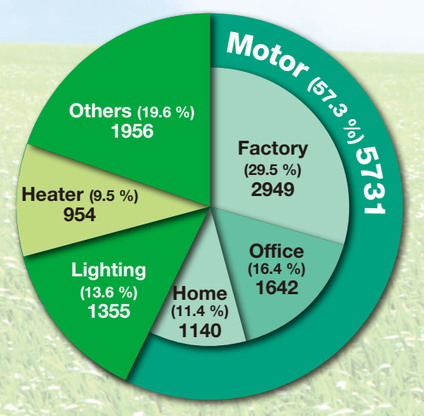


**With the spread of high-efficiency motors that minimizes the loss of electrical energy, We aim to achieve significant energy savings for the entire industry.**

KV series •60 mm square 200 W

GV series •80 mm square 50 W

GP series •80 mm square 50 W

# Brushless motors of MINAS-BL series realize "Three Savings".

**Commutation brushless motor with advanced controlling technology features high efficiency and low power loss. In addition, "Split Core Structure" developed for and proven in MINAS series AC servo motors is introduced to these new brushless motors to further reduce their sizes but increase power. These motors promote "three saving" activities — Energy saving, Cost saving and Space saving.**

## Space Saving

### GV KV GP For simultaneous pursuit of miniaturization and high power

"Split core structure" developed for and proven in MINAS series AC servo motors is introduced to these new models to significantly reduce size and weight but increase output power compared with induction motors.

▲Split core structure

■Comparison in size between GV/GP series and our compact geared motors (90 W)

Reduction in profile by approx. 55 %

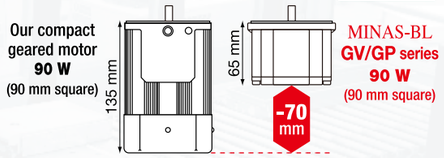


Comparison of KV series with general purpose induction motors:
**Approx. 1/7 in volume and approx. 1/4 in mass**

■Comparison in mass between GV/GP series and our compact geared motors

Lighter by approx. 1/3

| Output | GV/GP series (motor) | Our compact geared motor |
|---|---|---|
| 50 W | 0.7 kg | 2.4 kg(40 W) |
| 90 W | 1.0 kg | 3.2 kg |
| 130 W | 1.2 kg | — |

•The size of a GV/GP series brushless amplifier is almost equal to that of a postcard and weights approx. 370 g.

**Enable downsizing of embedded device.**

## Energy Saving

### GV KV GP Reduce loss and increase efficiency

A permanent magnet on a rotor reduces secondary loss. It also reduces power consumption by 20 % compared with those of our small geared motors.

■Comparison of input power with our conventional motors (90 W)

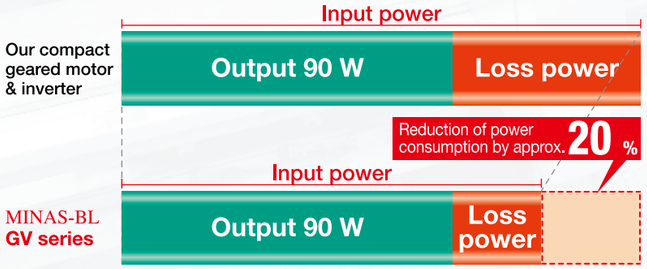


**Energy saving effects are significantly seen when these new models are used on multi-axis machines, e.g. textile machinery.**

## Cost Saving

### GV KV GP They also reduce maintenance and setup cost.

Commutatorless and brushless design reduces associated costs such as maintenance cost. Our setup support software helps prompt startup and reduction in operation management process.

■Setup support software PANATERM for BL

▲Parameter setting
File saving
(Batch reading/writing)

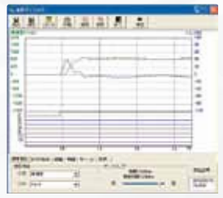

▲Waveform graphical display
Example: Velocity and torque
Status of I/O can also be monitored.

**The PANATERM for BL allows easy setup of parameters. Waveform graphical display can be used for precisely and accurately monitoring motor conditions, reducing setup and maintenance workload.**

## MINAS-BL series Provide More Features

### GV GP

**Speed control range 30 r/min ~ 4000 *1 r/min**

Proprietary CS sensor for sinewave driving

**Wide 1:133 variable speed range**

*1 Rated rotational speed: 3000 r/min

### GV KV GP

**Start torque 150 % (comparison of rated values)**

Unlike induction motor

**Stable operation startup at lower speed**

### GV KV GP Flat torque characteristic

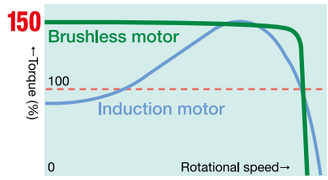


Proprietary CS sensor for

**Smooth operation**

### GV KV 8-speed operation

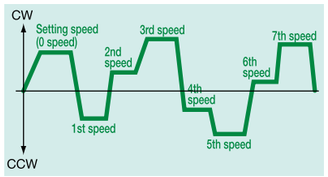


Stable operation maintains high productivity and yield ratio.

**The speed is regulated at 0.5 % or less variation.** *2

*2 Within rated torque

### GP Positioning at 4 points

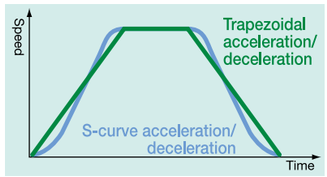


Not only trapezoidal waveform,

**S-curve acceleration/ deceleration can be set.**

### GV KV GP Compatible with international standards

**Compatible with wider power source voltage range**

(Single-phase: 100 V –120 V
Single-/Three-phase: 200 V –240 V)

# Speed Control Type

## GV series KV series

•90 mm square 130 W

•60 mm square 200 W

MINAS-BL GV series
Speed Control Type 50 W to 130 W

MINAS-BL KV series
Speed Control Type 50 W to 750 W

- High efficiency brushless motors realize energy saving.
- Distinctively controlled CS signal provides smooth operation through sinewave driving.
- Compatible with international standards (CE, UL, CCC and KC), and wider power source voltage range.
- The digital keypad (sold separately) and setup support software PANATERM for BL (available from our website, free of charge) enable parameter setting and monitoring.
- The proprietary CS sensor extends variable speed control range.
- Installation compatibility: GV series is compatible with our compact geared motors
  KV series is compatible with our AC servo motors
- Environmental protection: IP65

### Typical applications

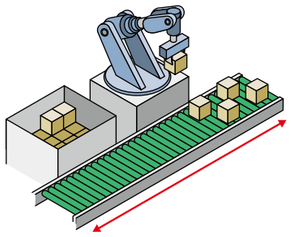

Conveyer

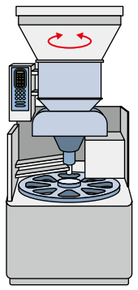

Food processor (agitating)

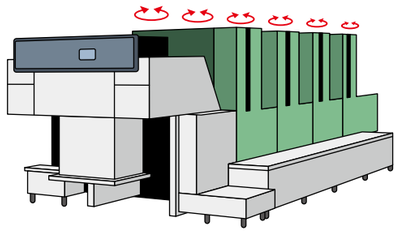

Textile machinery



# Position Control Type

## GP series

•80 mm square 50 W

MINAS-BL GP series
Position Control Type 50 W to 130 W

- Simple NC function enables easier positioning without help of a pulse unit.
- The proprietary CS sensor enables positioning without help of an external encoder.
- Compatible with international standards (CE, UL, CCC and KC), and wider power source voltage range.
- Internal teaching capability simplifies positioning operation.
- The digital keypad (sold separately) and setup support software PANATERM for BL (available from our website, free of charge) enable parameter setting and monitoring.
- Installation is compatible with our compact geared motors.
- Environmental protection: IP65

### Typical applications

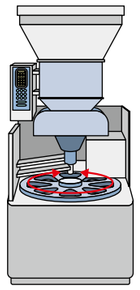

Food processor (turntable)

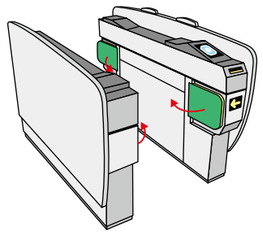

Automatic ticket gate

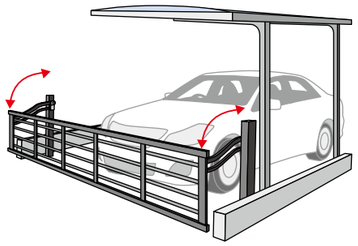

Gate

MEMO



# MINAS-BL GV series

## Speed Control Type 50 W to 130 W




• 90 mm square 130 W

Contents

# Check the model number

**<Motor>**

**MBMU 5A Z A X**

- **Type** (MBMU)
- **Motor rated output**
  5A: 50 W
  9A: 90 W
  1E: 130 W
- **Input power supply**
  1: 100 V
  2: 200 V
  Z: 100 V/200 V
- **Function**
  A: Standard
- **Shape of shaft**
  X: For gear head MX8G
  Z: For gear head MZ9G/MY9G
  S: Round shaft

**<Gear head>**

**M X 8 G 30 B**

- **Gear head** (G)
- **Size**
  8: 80 mm sq.
  9: 90 mm sq.
- **Motor rated output**
  X: 50 W
  Z: Hinge not attached, 90 W, 130 W
  Y: Hinge attached, 90 W, 130 W
- **Reduction ratio**
  (Example) 30: Reduction ratio of 1/30
  3, 3.6, 5, 6, 7.5, 9, 10, 12.5, 15, 18, 20, 25, 30, 36, 50, 60, 75, 90, 100, 120, 150, 180, (200)
  * 1/200 only for 90 mm sq.
- **Bearing**
  B: Ball bearing

**<Brushless amplifier>**

**MBEG 5A 5 B C V**

- **Type** (MBEG)
- **Motor rated output**
  5A: 50 W
  9A: 90 W
  1E: 130 W
- **Input power supply**
  1: Single phase AC100 V to 120 V
  5: Single phase/ 3-phase AC200 V to 240 V
- **Function 1**
  B: with circuit for regenerative resistor
- **Function 2**
  C: RS485 communication,
  Signal input/Sink type (NPN transistor)
  D: RS485 communication,
  Signal input/Source type (PNP transistor)
  Source type made to order item.
  Please contact us if you'd like detailed information.
- **Control mode**
  V: speed control

# Brushless motor specifications

| Item | Specifications | | | | |
|---|---|---|---|---|---|
| Flange size | 80 mm sq. | 90 mm sq. | | | |
| Motor model No. *1 | MBMU5AZA○ | MBMU9A1A○ | MBMU9A2A○ | MBMU1E1A○ | MBMU1E2A○ |
| Motor rated output (W) | 50 | 90 | | 130 | |
| Voltage (V) | for 100/200 | for 100 | for 200 | for 100 | for 200 |
| Rated torque (N·m) | 0.16 | 0.29 | | 0.41 | |
| Starting torque*2 (N·m) | 0.24 | 0.43 | | 0.62 | |
| Rated input current (A(rms)) | 0.53 | 1.00 | 0.50 | 1.30 | 0.72 |
| Moment of inertia of rotor ($\times 10^{-4}$ kg·m$^2$) | 0.12 | 0.27 | | 0.36 | |
| Rating | Continuous | | | | |
| Rated rotation speed*3 (r/min) | 3000 | | | | |
| Speed control range (r/min) | 30 to 4000 | | | | |
| Ambient temperature | −10 °C to +40 °C (free from freezing)<br>* Ambient temperature is measured at a distance of 5 cm from the motor. | | | | |
| Ambient humidity | 20 % to 85 % RH (free from condensation) | | | | |
| Altitude | Lower than 1000 m | | | | |
| Vibration | 4.9 m/s$^2$ or less X, Y, Z | | | | |
| Motor insulation class | 130(B) (UL certified 105 (A)) | | | | |
| Protection structure | IP65*4,*5 | | | | |
| Number of poles | 8 | | | | |
| Motor mass (kg) | 0.7 | 1.0 | | 1.2 | |

*1 Suffix of "○" in the motor model represents shape of shaft.
*2 Representative value
*3 Motor shaft speed: to be multiplied by the reduction ratio when the gear head is used.
*4 Excluding the shaft pass-through section and cable end connector.
*5 These motors conform to the test conditions specified in EN standards (EN60529, EN60034-5).
Do not use these motors in application where water proof performance is required such as continuous wash-down operation.

### Overload protection characteristics

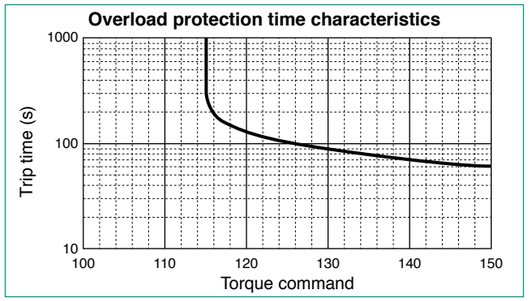


• 100 of the torque command represents the rated torque.



# Brushless amplifier specifications (GV series)

| Item | | Specifications | | | | | | | | |
|---|---|---|---|---|---|---|---|---|---|---|
| Amplifier model No. | | MBEG5A1BCV | MBEG5A5BCV | | MBEG9A1BCV | MBEG9A5BCV | | MBEG1E1BCV | MBEG1E5BCV | |
| Applicable Motor *1 | | MBMU5AZA○ | | | MBMU9A1A○ | MBMU9A2A○ | | MBMU1E1A○ | MBMU1E2A○ | |
| Motor rated output (W) | | 50 | | | 90 | | | 130 | | |
| Input power supply voltage (V) | | Single phase 100 to 120 | Single phase | 3-phase | Single phase 100 to 120 | Single phase | 3-phase | Single phase 100 to 120 | Single phase | 3-phase |
| | | | 200 to 240 | | | 200 to 240 | | | 200 to 240 | |
| Frequency (Hz) | | 50/60 | | | | | | | | |
| Rated input current (A) | | 1.5 | 0.7 | 0.35 | 2.2 | 1.1 | 0.5 | 2.8 | 1.5 | 0.7 |
| Voltage tolerance | | ±10 % | | | | | | | | |
| Control method | | Speed control by CS signal, PWM sine wave driving system | | | | | | | | |
| Ambient temperature | | 0 °C to +50 °C (free from freezing)<br>* Ambient temperature is measured at a distance of 5 cm from the amplifier. | | | | | | | | |
| Ambient humidity | | 20 % to 85 % RH (free from condensation) | | | | | | | | |
| Location | | Indoor (No corrosive gas, A place without garbage, and dust) | | | | | | | | |
| Altitude | | Lower than 1000 m | | | | | | | | |
| Vibration | | 5.9 m/s$^2$ or less (10 Hz to 60 Hz) | | | | | | | | |
| Protection structure/ Cooling system | | Equivalent to IP20/ Self cooling | | | | | | | | |
| Storage temperature | | Normal temperature<br>* Temperature which is acceptable for a short time, such as during transportation is −20 °C to 60 °C (free from freezing) | | | | | | | | |
| Storage humidity | | Normal humidity | | | | | | | | |
| Rated rotation speed | | 3000 r/min | | | | | | | | |
| Speed control range | | 30 r/min to 4000 r/min (Speed ratio 1:133) | | | | | | | | |
| Speed fluctuation factor | With load | ±0.5 % or below (at 0 to Rated torque, Rated rotation speed) | | | | | | | | |
| | With voltage | ±0.5 % or below (at supply voltage ±10 %, rated rotation speed) | | | | | | | | |
| | With temperature | ±0.5 % or below (at 0 °C to 50 °C, rated rotation speed) | | | | | | | | |
| Acceleration/ Deceleration time | | 0.01 sec to 300 sec (time for changing 1000 r/min)*2 | | | | | | | | |
| Stopping procedure | | Slowdown stop/ Free-run stop*2 | | | | | | | | |
| Speed setting | | 0 r/min to 4000 r/min (analogue voltage (0 V to 5 V), console A),<br>0 r/min to 4000 r/min (Setting selection by parameter on Digital key pad) | | | | | | | | |
| Speed setting resolution | | Analog: approx. 1/200 of upper speed limit Digital: 1 r/min | | | | | | | | |
| Speed setting precision (at 20 °C) | | Analogue: ±3 % or below of upper speed limit (±90 r/min or below at upper speed limit 3000 r/min)<br>[Digital: 1 % or below of upper speed limit ] | | | | | | | | |
| Operation mode | | 8 speed | | | | | | | | |
| Signal input | | 5 inputs*2 (run/ stop, CW run/ CCW run, multi function 3bit) | | | | | | | | |
| Signal output | | 2 outputs (Open collector)*2 (Trip output etc) | | | | | | | | |
| Communication function | RS485 | Max 31 units. Setting of parameter, monitoring of control condition.<br>Communication speed: Choose from 2400 bps/ 4800 bps/ 9600 bps | | | | | | | | |
| | RS232 | Setting of parameter and monitoring of control condition are enabled with commercial PC.*3 | | | | | | | | |
| Digital key pad | | Setting of parameter, monitoring of control condition.*4 | | | | | | | | |
| Protective function | | Warning : Undervoltage*2, Overload warning, setting change warning<br>Protect : Undervoltage*2, Overload, Overcurrent, Overvoltage, Overheat, Overspeed, Sensor error, RS485 communication error, External forced trip error, User parameter error, CPU error | | | | | | | | |
| Regenerating brake | | Regenerative braking resistor can be externally connected.*5<br>Instantaneous braking torque 200 %, Continuous regenerative ability of external regenerative resistor: 10 W<br>(Regenerative operation with which motor shaft is rotated by load, e.g. load lowering operation, should not be continued.) | | | | | | | | |
| Protection level | | Protection level: torque command 115 (inverse time characteristics) | | | | | | | | |
| Amplifier mass (kg) | | 0.37 | | | | | | | | |

*1 Suffix of "○" in the motor model represents shape of shaft. *2 Can be changed from PANATERM for BL or Digital key pad.
*3 PANATERM for BL (Download from our web site.), PC connection cable (DV0P4140), Digital key pad connection cable (DV0P383*0) is required. If your PC does not have RS232 port, use RS232-USB converter.
*4 Digital key pad connection cable (DV0P383*0) is required. *5 Use optional external regenerative resistor (sold separately).

# System configuration

| Power supply | Rated rotation speed (r/min) | output (W) | Motor | Gear head (Note 1) | Brushless amplifier | Brushless amplifier (supplied with power cable) (Note 2) | Optional parts: External regenerative resistor | Optional parts: Noise filter | Optional parts: Surge absorber | Optional parts: Reactor |
|---|---|---|---|---|---|---|---|---|---|---|
| | | | | | | Reference page | p. 71 | p. 67 | p. 67 | p. 73 |
| Single phase 100 V | 3000 | 50 | MBMU5AZAX | MX8G□B | MBEG5A1BCV | MBEG5A1BCVC | for 100 V DV0P2890 | for single phase power supply DV0P4170 | for single phase power supply DV0P4190 | for single phase power supply DV0P227 |
| | | | MBMU5AZAS | — | | | | | | |
| | | 90 | MBMU9A1AZ | MZ9G□B MY9G□B | MBEG9A1BCV | MBEG9A1BCVC | | | | |
| | | | MBMU9A1AS | — | | | | | | |
| | | 130 | MBMU1E1AZ | MZ9G□B MY9G□B | MBEG1E1BCV | MBEG1E1BCVC | | | | |
| | | | MBMU1E1AS | — | | | | | | |
| Single/ 3-phase 200 V | | 50 | MBMU5AZAX | MX8G□B | MBEG5A5BCV | MBEG5A5BCVC | for 200 V DV0PM20068 | for single phase power supply DV0P4170 for 3-phase power supply DV0PM20042 | for single phase power supply DV0P4190 for 3-phase power supply DV0P1450 | for single phase power supply DV0P227 for 3-phase power supply DV0P220 |
| | | | MBMU5AZAS | — | | | | | | |
| | | 90 | MBMU9A2AZ | MZ9G□B MY9G□B | MBEG9A5BCV | MBEG9A5BCVC | | | | |
| | | | MBMU9A2AS | — | | | | | | |
| | | 130 | MBMU1E2AZ | MZ9G□B MY9G□B | MBEG1E5BCV | MBEG1E5BCVC | | | | |
| | | | MBMU1E2AS | — | | | | | | |

(Note 1) A figure representing reduction ratio in □ .
(Note 2) Refer to p. 74 for a power supply connecting cable.
This part number is the ordering part number for the amplifier and power cable, not for ordering amplifier only.
* When installing the reactor, refer to p. 73.

*** Be sure to use a set of matched components (series, power source, capacity, output, etc.)**
*** This motor is not provided with a holding brake. If it is used to drive a vertical shaft, the movable section may fall down by its own weight as power is turned off.**

## ■ Options

| Optional parts | | Parts number | Reference page |
|---|---|---|---|
| Motor extension cable | 1 m | DV0PQ1000110 | P.69 |
| | 3 m | DV0PQ1000130 | |
| | 5 m | DV0PQ1000150 | |
| | 10 m | DV0PQ10001A1 | |
| Power supply connector kit | | DV0P2870 | P.70 |
| Console A*1 | | DV0P3500 | P.68 |
| Console A connection cable | 1 m | DV0PM2006910 | P.68 |
| | 3 m | DV0PM2006930 | |
| | 5 m | DV0PM2006950 | |
| Digital key pad*2 | | DV0P3510 | P.68 |

| Optional parts | | Parts number | Reference page |
|---|---|---|---|
| Digital key pad connection cable | 1 m | DV0P38310 | P.68 |
| | 3 m | DV0P38330 | |
| | 5 m | DV0P38350 | |
| External speed setter | | DV0PM20078 | P.71 |
| Control signal cable | 2 m | DV0PM20076 | P.70 |
| I/O connector kit | | DV0PM20070 | P.71 |
| Panel connector kit | | DV0P3610 | P.71 |
| PC connection cable*3 | 1.5 m | DV0P4140 | P.70 |
| Noise filter for signal line | | DV0P1460 | P.67 |
| DIN rail mounting unit | | DV0P3811 | P.72 |

* For details of cable, refer to p. 68 to p. 70.
*1 When using Console A, the Console A connection cable (DV0PM20069*0) is required.
*2 When using Digital key pad, the Digital key pad connection cable (DV0P383*0) is required.
*3 When connecting PC, the PC connection cable (DV0P4140) and the Digital key pad connection cable (DV0P383*0) are required.

## ■ Wiring equipment

Selection of circuit breaker (MCCB), magnetic contactor and electric wire. (To check conformity with international standards, refer to p. 93 Conformity with international safety standards.)

| Voltage | Power capacity | MCCB Rated current | Magnetic contactor Rated Current (Contact composition) | Core of electric wire ($mm^2$): Main circuit, Grounding | Core of electric wire ($mm^2$): Control circuit |
|---|---|---|---|---|---|
| Single phase 100 V | 50 W to 130 W | 5 A | 20 A (3P+1a) | 0.5 (AWG20) | 0.13 (AWG26) |
| Single phase 200 V | | | | | |
| 3-phase 200 V | | | | | |

■ **Be sure to connect the earth terminal to ground.**
In wiring to power supply (outside of equipment) from MCCB, use an electric wire of 1.6 mm diameter (2.0 $mm^2$) or more both for main circuit and grounding. Apply grounding class D (100 Ω or below) for grounding.

● **Selection of relay**
A relay used in a control circuit, e.g. at the control input terminal should be small signal relay (Min. guaranteed current 1 mA or less) for positive contact. <Example> Panasonic: DS type, HC type OMRON: G2A type

● **Selection of control circuit switch**
When using a switch in place of relay, select a switch rated at minute electric current, to assure positive contact.
<Example> Nihon Kaiheiki Ind.: M-2012J-G

● **The wiring of SER and I/O connector**
The wiring of SER and I/O connector should separate from power line to prevent malfunction.

● **Wiring to the I/O connector**
Permissible length for control signal cable is 5 m or less.



# System configuration diagram

## ● Example of analog setting (Console A)

· Set the speed with the speed setting knob (variable resistor).
· Start/stop the motor from the RUN/STOP switch.
· To change rotating direction, use the rotation direction selector switch.

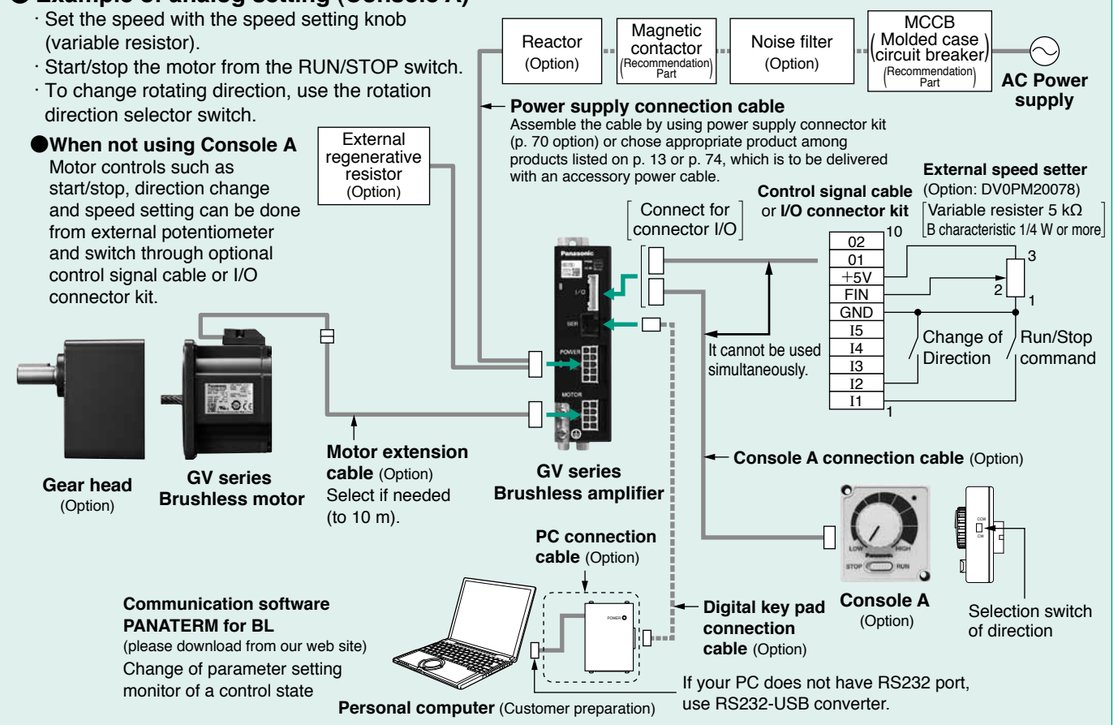


## ● Example of digital setting (Digital key pad)

• To start/stop the motor, use RUN/STOP key
• Digital monitor [Rotation speed, Commanded speed, Internal DC voltage, Load factor, Torque, Trip history, Overload warning (flashing)]
• Set/change parameters
• Storage of the parameters (read, write)

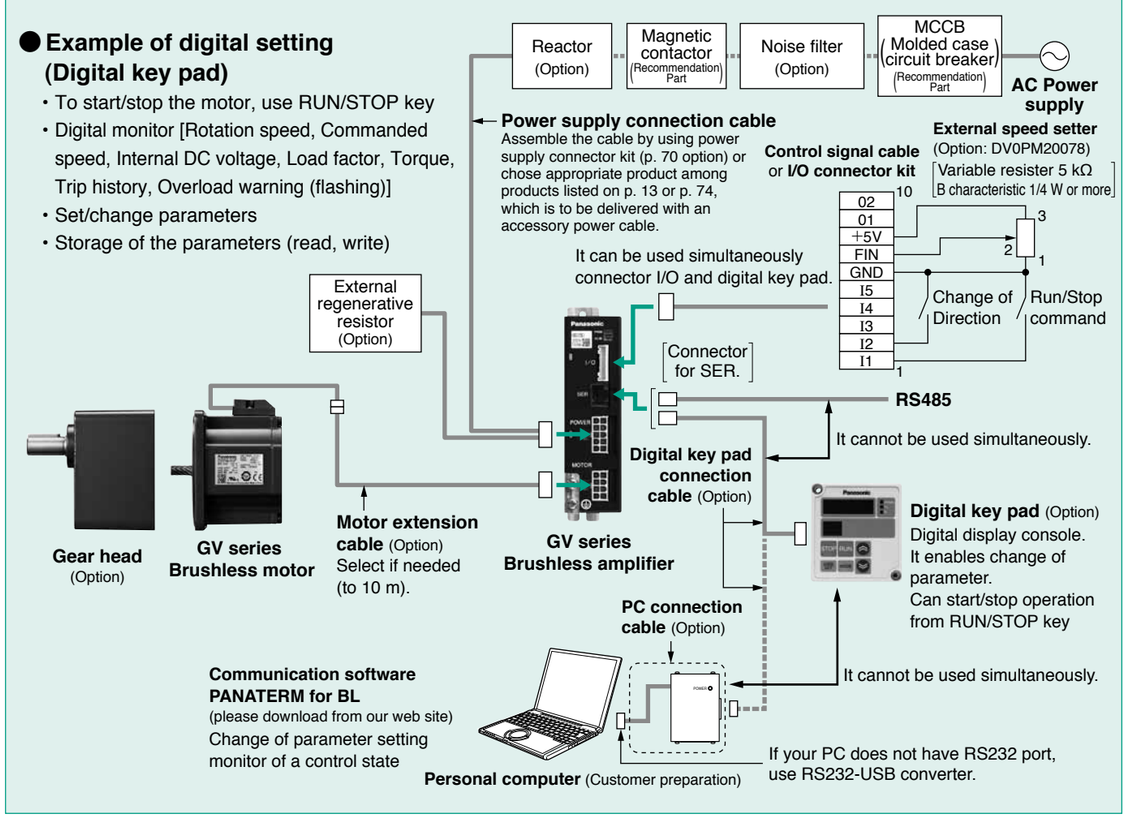

# Parameter list of brushless amplifier

| Parameter No. | Parameter name | Explanation | Setting range |
|---|---|---|---|
| 00 | Internal speed (0-th speed) | Desired running speed can be set with the Digital key pad. | 0 r/min to Upper speed limit [Minimum unit 1 r/min] |
| 01 to 07 | 1st speed to 7th speed | Speed in multi-speed running can be set. | 0 r/min to Upper speed limit [Minimum unit 1 r/min] |
| 10<br>11 | 1st acceleration time<br>2nd acceleration time | The change factor of output speed in acceleration can be determined. Set by time for changing 1000 r/min. | 0.01 sec to 300 sec<br>to 3 sec: Incremented by 0.01 second<br>3 sec to 30 sec: Incremented by 0.1 second<br>30 sec to 300 sec: Incremented by 1 second |
| 12<br>13 | 1st deceleration time<br>2nd deceleration time | The change factor of output speed in deceleration can be determined. Set by time for changing 1000 r/min. | |
| 14<br>15 | Acceleration mode selection<br>Deceleration mode selection | Straight line acceleration/deceleration and curve (S-shape) acceleration and deceleration can be chosen individually for acceleration and deceleration.<br>LINEAR / "S" SHAPE-1 / "S" SHAPE-2<br>Rotation speed, 0, Time | Select S-shape when "31 Speed command selection" is PnL. |
| 16 | Stop mode selection | You can select how to stop the motor when stop command is input: free-run stop or stop after deceleration. | |
| 17 | Free-run waiting time | When the stop mode is set to deceleration stop, the zero speed (servo lock time) after deceleration can be adjusted. | 0.0 sec to 10.0 sec [Minimum unit 0.1 sec] |
| 1A | Velocity loop proportional gain | Enables setting of proportional gain of velocity amplifier. | 0 to 10000 [Minimum unit 0.1] |
| 1b | Velocity loop integration gain | Enables setting of integration gain of velocity amplifier. | 0 to 10000 [Minimum unit 0.1] |
| 30 | Run command selection | Run command can be applied through: Digital key pad, input terminal "I1", "I2" or RS485 communication, whichever selected. | |
| 31 | Speed command selection | You can choose whether to use "00 Internal speed (0-th speed)" or analog input terminal for speed command. | |
| 32 | Operation mode selection | Parameter for choosing operation mode | |

| Setting | Operation made | Function of signal input I3 | I4 | I5 |
|---|---|---|---|---|
| 1 | 1st speed operation mode | Free-run stop<br>External forced trip<br>2nd Acc./Dec. time<br>Trip reset | | |
| 2 | 2nd speed operation mode | Speed setting | | |
| 4 | 4th speed operation mode | Speed setting | Speed setting | |
| 8 | 8th speed operation mode | Speed setting | Speed setting | Speed setting |

| | | | |
|---|---|---|---|
| 33<br>34<br>35<br>36 | I1/I2 function selection<br>I3 function selection<br>I4 function selection<br>I5 function selection | Signal input functions I1 to I5 can be individually selected. | Free-run stop<br>External forced trip<br>2nd Acc./Dec. time<br>Trip reset |
| 3A | Lower speed limit | When speed command selection is set to analog, set the motor speed at 0 V input.<br>Speed instruction value; Upper speed limit; Lower speed limit; 0; 0.5; 4.5; 5 V; Input voltage | 0 r/min to Upper speed limit [Minimum unit 1 r/min] |
| 3b | Upper speed limit | Upper limit of motor command speed. | 0 r/min to 4000 r/min [Minimum unit 1 r/min] |
| 3C | Torque limit | Set the upper limit of the output torque command. 100 represents the rated torque. | 50 to 150 [Minimum unit 1] |



| Parameter No. | Parameter name | Explanation | Setting range |
|---|---|---|---|
| 40<br>41 | O1 function selection<br>O2 function selection | The type of signals from output terminals "O1" and "O2" can be selected.<br>* Do not use it for position detector and positioning. | Trip: ON, Speed is reached to a command value: ON, Running: ON, Free run: ON, CCW run: ON, CW run: ON, Load exceeds 100 %: ON, Speed pulse signal* |
| 42<br>43 | O1 output polarity selection<br>O2 output polarity selection | This is a function for inverting the polarity of signal output terminal O1 and O2. | |
| 44 | Speed matching range | "Matching range" of arriving signal can be adjusted. | 20 r/min to Upper speed limit [Minimum unit 1 r/min] |
| 45 | Output pulse count selection | Set the number of pulses to be output to output terminals "O1" and "O2".<br>• When you use it in more than 3000 r/min, choose values less than 12.<br>• Do not use "the speed pulse" of the output signal (parameter No.45) for position sensing and a positioning use. | 1, 2, 3, 4, 6, 8, 12, 24 |
| 46 | Monitor mode selection | You can choose description to be displayed on 5-digit LED when turning on power. | Rotation speed, Speed command, Internal DC voltage, Load factor, Torque |
| 47<br>48 | Numerator of display magnification factor<br>Denominator of display magnification factor | By setting the multiplying factor of a value displayed on 5-digit LED, the rotation speed of gear output shaft and conveyor speed can be displayed. | |
| 4A | Trip history clear | Trip history can be cleared. | |
| 4b to 4F | Trip history 1 to Trip history 5 | Trip history for 5 times in the past is stored. | |
| 50 | Undervoltage trip selection | You can select whether tripping occurs upon detection of undervoltage. | |
| 51 | Retrial selection | Automatic reset in trip (trip retrial) can be set here. | |
| 52 | Retrial start time | You can set waiting time until retrial operation is performed after tripping is found. | 1 sec to 120 sec [Minimum unit 1 sec] |
| 54 | Parameter initializing | Parameters can be initialized to the factory default. | |
| 57 | Parameter copy | Parameters can be copied. | |
| 5A | RS485 device number | Set the device number of Amplifier in communication (Amplifier ID) | |
| 5b | RS485 communication speed | Set the communication speed of RS485 communication. | |
| 5C | RS485 communication standard | Set the communication standard of RS485 communication. | |
| 5d | RS485 communication response time | You can set the shortest time necessary to set the RS485 bus to transmission mode to response upon receiving communication data. | |
| 5E | RS485 retry times of communication | Set the retry times of RS485 communication. | |
| 5F | RS485 protocol timeout | You can set the permissible time interval between successively received character codes. | |

## • How to use Digital key pad

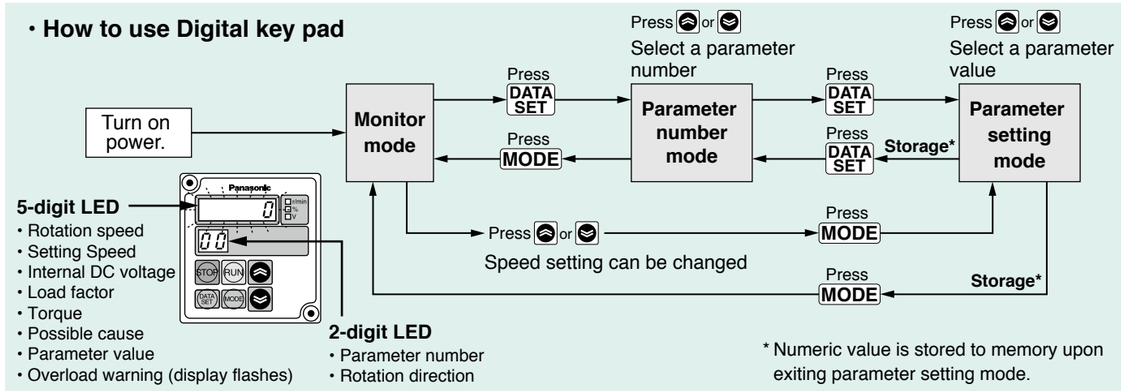

## Specification (For Common specification, see p. 11, p. 12)

| Size | Model No. / Amplifier and Motor: Brushless Amplifier (Model number in ( ) is shipped with power connection cable) | Motor | Rated output (W) | Input power supply for Amplifier: Voltage AC (V) | Allowed range (%) | Frequency (Hz) | Rated input current (A) | Rated torque (N·m) | Starting torque (N·m) | Rated speed (r/min) | Maximum rotation speed (r/min) |
|---|---|---|---|---|---|---|---|---|---|---|---|
| 80 mm sq. | MBEG5A1BCV (MBEG5A1BCVC) | MBMU5AZA○ | 50 | Single phase 100 to 120 | ±10 | 50/60 | 1.5 | 0.16 | 0.24 | 3000 | 4000 |
| | MBEG5A5BCV (MBEG5A5BCVC) | MBMU5AZA○ | | Single phase /3-phase 200 to 240 | | | Single phase 0.7<br>3-phase 0.35 | | | | |

* Suffix of "○" in the motor model No. represents shape of shaft. Refer to the "Check the model number" p. 11. * Starting torque: Representative value

## Permissible torque at output shaft of gear head (N·m)

| Applicable Gear head | Reduction ratio | | 3 | 3.6 | 5 | 6 | 7.5 | 9 | 10 | 12.5 | 15 | 18 | 20 | 25 | 30 | 36 | 50 | 60 | 75 | 90 | 100 | 120 | 150 | 180 |
|---|---|---|---|---|---|---|---|---|---|---|---|---|---|---|---|---|---|---|---|---|---|---|---|---|
| MX8G□B | motor rotation speed (r/min) | 3000 or less | 0.39 | 0.46 | 0.64 | 0.77 | 0.96 | 1.16 | 1.29 | 1.61 | 1.92 | 2.33 | 2.59 | 3.23 | 3.61 | 4.33 | 5.93 | 7.29 | 7.84 | | | | | |
| | | 3000 to 4000 | 0.29 | 0.35 | 0.48 | 0.58 | 0.72 | 0.87 | 0.97 | 1.21 | 1.44 | 1.75 | 1.94 | 2.42 | 2.71 | 3.25 | 4.45 | 5.47 | 6.84 | 7.84 | | | | |
| | Rotational direction | | Same as motor rotational direction | | | | | | | | | | | | Reverse to motor rotational direction | | | | | | | | | |

## Permissible load inertia moment (×10⁻⁴ kg·m²)

| Reduction ratio | 3 | 3.6 | 5 | 6 | 7.5 | 9 | 10 | 12.5 | 15 | 18 | 20 | 25 | 30 | 36 | 50 | 60 | 75 | 90 | 100 | 120 | 150 | 180 |
|---|---|---|---|---|---|---|---|---|---|---|---|---|---|---|---|---|---|---|---|---|---|---|
| Applicable Gear head | | | | | | | | | | | | | | | | | | | | | | |
| MX8G□B | 1.25 | 1.79 | 3.42 | 4.90 | 7.72 | 11.2 | 13.8 | 21.6 | 30.6 | 45.2 | 55.8 | 86.9 | 127 | 183 | 342 | | | | | | | |

## Permissible shaft load

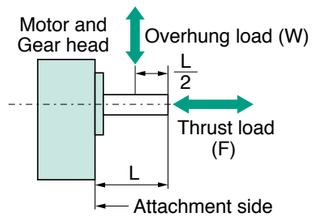


| | | Overhung load (W) | Thrust load (F) |
|---|---|---|---|
| Motor shaft (Round shaft) | Output 50 W | 100 N | 10 N |
| Applicable Gear head | MX8G□B | 294 N | 49 N |

## Wiring diagram

• **In Case of 3-Phase 200 V**

*When you use single phase, connect the main power between L1 and L2 terminals.

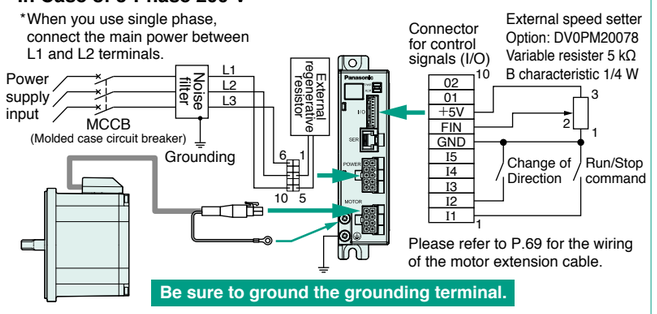


**Be sure to ground the grounding terminal.**

In wiring to power supply (outside of equipment) from MCCB, use an electric wire of 1.6 mm diameter (2.0 mm²) or more both for main circuit and grounding. Apply grounding class D (100 Ω or below) for grounding. Do not tighten the ground wires together, but connect them individually.

## Speed-torque characteristic

〈Dotted line shows a characteristic curve when supply voltage drops by 10 %.〉

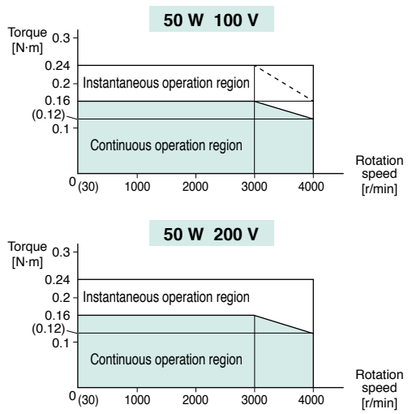


* Please refer to P.95 Support option.
* Before using, be sure to read "Instruction manual" to check precautions and correct procedure.



## Motor (dimensions)

Unit mm

mass 0.7 kg

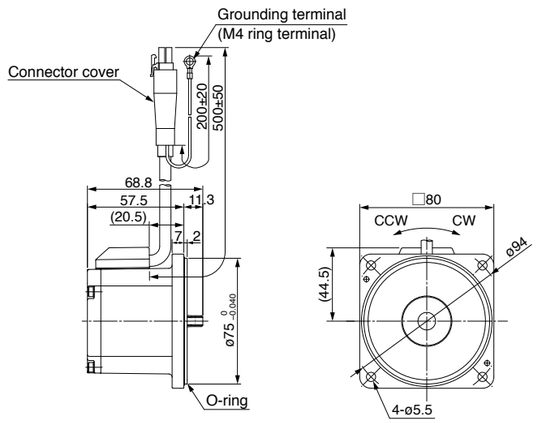


<Round shaft type>

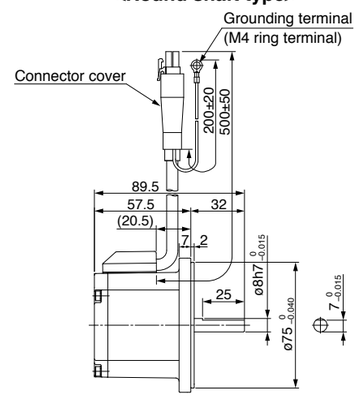


## Gear head (dimensions)

Unit mm

**MX8G□B**

mass 0.6 kg

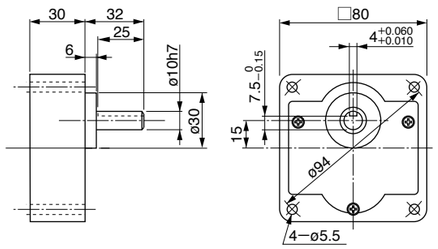


<Key and keyway [attachment]>

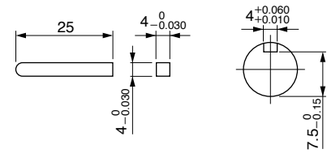


## Brushless amplifier (dimensions)

Unit mm

mass 0.37 kg

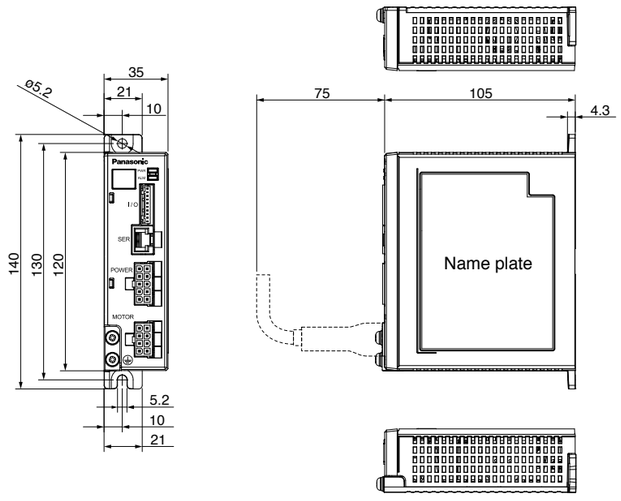


<Cautions> Dimensions are subject to change without notice. Contact us or a dealer for the latest information.

## ■ Specification (For Common specification, see p. 11, p. 12)

| Size | Model No. / Amplifier and Motor: Brushless Amplifier (Model number in ( ) is shipped with power connection cable) | Motor | Rated output (W) | Input power supply for Amplifier: Voltage AC (V) | Allowed range (%) | Frequency (Hz) | Rated input current (A) | Rated torque (N·m) | Starting torque (N·m) | Rated speed (r/min) | Maximum rotation speed (r/min) |
|---|---|---|---|---|---|---|---|---|---|---|---|
| 90 mm sq. | MBEG9A1BCV (MBEG9A1BCVC) | MBMU9A1A○ | 90 | Single phase 100 to 120 | ±10 | 50/60 | 2.2 | 0.29 | 0.43 | 3000 | 4000 |
| | MBEG9A5BCV (MBEG9A5BCVC) | MBMU9A2A○ | | Single phase /3-phase 200 to 240 | | | Single phase 1.1<br>3-phase 0.5 | | | | |

* Suffix of "○" in the motor model No. represents shape of shaft. Refer to the "Check the model number" p. 11. * Starting torque: Representative value

## ■ Permissible torque at output shaft of gear head (N·m)

| Applicable Gear head | Reduction ratio | | 3 | 3.6 | 5 | 6 | 7.5 | 9 | 10 | 12.5 | 15 | 18 | 20 | 25 | 30 | 36 | 50 | 60 | 75 | 90 | 100 | 120 | 150 | 180 | 200 |
|---|---|---|---|---|---|---|---|---|---|---|---|---|---|---|---|---|---|---|---|---|---|---|---|---|---|
| MZ9G□B MY9G□B | motor rotation speed (r/min) | 3000 or less | 0.67 | 0.81 | 1.12 | 1.34 | 1.69 | 2.02 | 2.28 | 2.54 | 3.06 | 3.72 | 4.11 | 5.27 | 6.22 | 6.96 | 9.81 | 11.7 | 14.7 | 17.3 | 19.0 | 19.6 | | | |
| | | 3000 to 4000 | 0.50 | 0.61 | 0.84 | 1.01 | 1.27 | 1.52 | 1.71 | 1.91 | 2.30 | 2.79 | 3.08 | 3.95 | 4.67 | 5.22 | 7.36 | 8.78 | 11.0 | 13.0 | 14.3 | 17.0 | 19.6 | | |
| | Rotational direction | | Same as motor rotational direction | | | | | | | Reverse to motor rotational direction | | | | | | Same as motor rotational direction | | | | | | | | | |

## ■ Permissible load inertia moment (×10⁻⁴ kg·m²)

| Reduction ratio | 3 | 3.6 | 5 | 6 | 7.5 | 9 | 10 | 12.5 | 15 | 18 | 20 | 25 | 30 | 36 | 50 | 60 | 75 | 90 | 100 | 120 | 150 | 180 | 200 |
|---|---|---|---|---|---|---|---|---|---|---|---|---|---|---|---|---|---|---|---|---|---|---|---|
| Applicable Gear head | | | | | | | | | | | | | | | | | | | | | | | |
| MZ9G□B／MY9G□B | 5.93 | 8.47 | 16.4 | 23.6 | 37.3 | 53.4 | 67.6 | 98.3 | 142 | 211 | 257 | 423 | 589 | 847 | 1684 | | | | | | | | |

## ■ Permissible shaft load

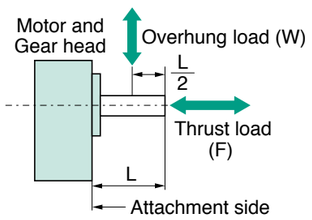


| | | Overhung load (W) | Thrust load (F) |
|---|---|---|---|
| Motor shaft (Round shaft) | Output 90 W | 150 N | 20 N |
| Applicable Gear head | MZ9G□B MY9G□B | 588 N | 147 N |

## ■ Wiring diagram

**• In Case of 3-Phase 200 V**

*When you use single phase, connect the main power between L1 and L2 terminals.

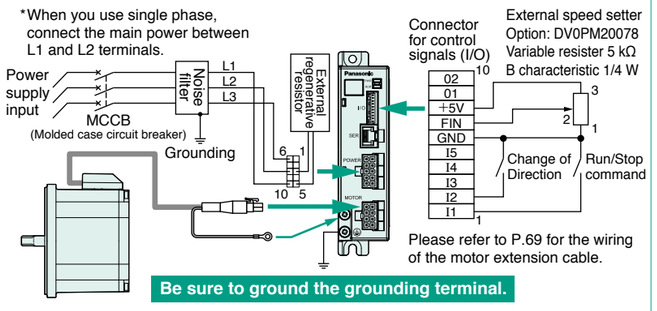


Please refer to P.69 for the wiring of the motor extension cable.

**Be sure to ground the grounding terminal.**

In wiring to power supply (outside of equipment) from MCCB, use an electric wire of 1.6 mm diameter (2.0 mm²) or more both for main circuit and grounding. Apply grounding class D (100 Ω or below) for grounding. Do not tighten the ground wires together, but connect them individually.

## ■ Speed-torque characteristic

〈Dotted line shows a characteristic curve when supply voltage drops by 10 %.〉

**90 W 100 V/ 200 V**

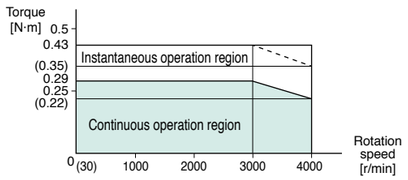


* Please refer to P.95 Support option.
* Before using, be sure to read "Instruction manual" to check precautions and correct procedure.



## Motor (dimensions)

Unit mm

mass 1.0 kg

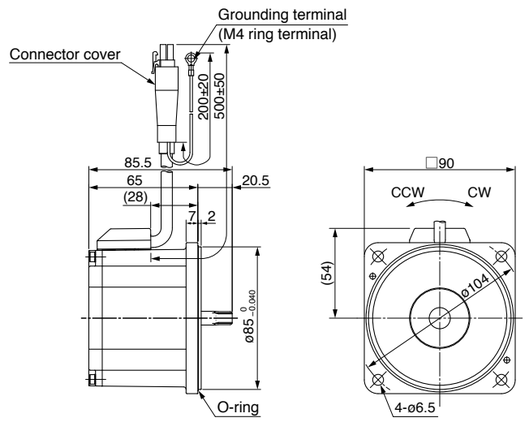


**<Round shaft type>**

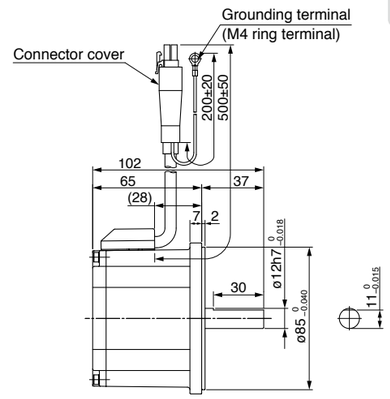


## Gear head (dimensions)

Unit mm

**MZ9G□B** (Ball bearing/Hinge not attached) mass 1.4 kg

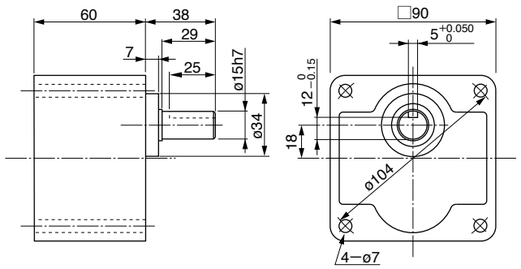


**MY9G□B** (Ball bearing/Hinge attached) mass 1.4 kg

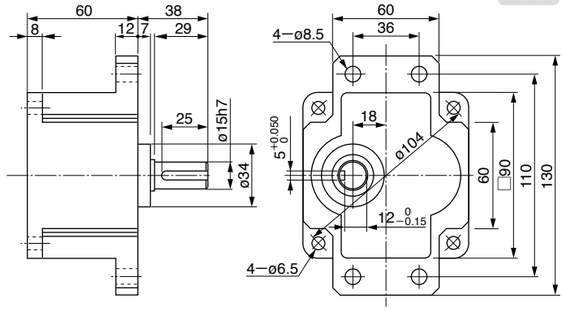


## Brushless amplifier (dimensions)

Unit mm

mass 0.37 kg

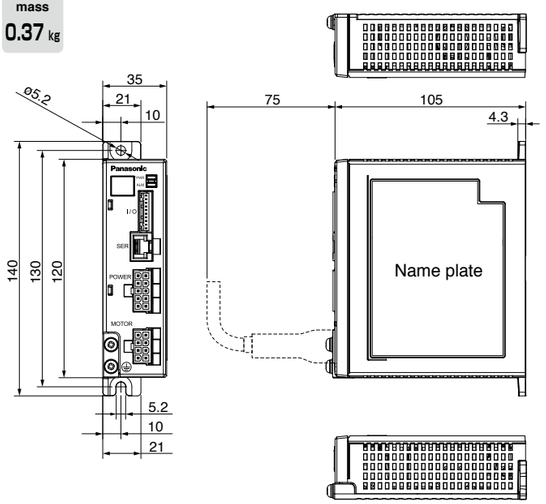


**<Key and keyway [attachment]>**

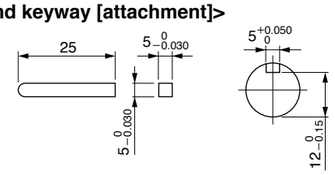


<Cautions> Dimensions are subject to change without notice. Contact us or a dealer for the latest information.

## Specification (For Common specification, see p. 11, p. 12)

| Size | Model No. / Amplifier and Motor: Brushless Amplifier (Model number in ( ) is shipped with power connection cable) | Motor | Rated output (W) | Input power supply for Amplifier: Voltage AC (V) | Allowed range (%) | Frequency (Hz) | Rated input current (A) | Rated torque (N·m) | Starting torque (N·m) | Rated speed (r/min) | Maximum rotation speed (r/min) |
|---|---|---|---|---|---|---|---|---|---|---|---|
| 90 mm sq. | MBEG1E1BCV (MBEG1E1BCVC) | MBMU1E1A○ | 130 | Single phase 100 to 120 | ±10 | 50/60 | 2.8 | 0.41 | 0.62 | 3000 | 4000 |
| | MBEG1E5BCV (MBEG1E5BCVC) | MBMU1E2A○ | | Single phase /3-phase 200 to 240 | | | Single phase 1.5<br>3-phase 0.7 | | | | |

* Suffix of "○" in the motor model No. represents shape of shaft. Refer to the "Check the model number" p. 11. * Starting torque: Representative value

## Permissible torque at output shaft of gear head (N·m)

| Applicable Gear head | Reduction ratio | | 3 | 3.6 | 5 | 6 | 7.5 | 9 | 10 | 12.5 | 15 | 18 | 20 | 25 | 30 | 36 | 50 | 60 | 75 | 90 | 100 | 120 | 150 | 180 | 200 |
|---|---|---|---|---|---|---|---|---|---|---|---|---|---|---|---|---|---|---|---|---|---|---|---|---|---|
| MZ9G□B MY9G□B | motor rotation speed (r/min) | 3000 or less | 1.01 | 1.21 | 1.69 | 2.02 | 2.54 | 3.04 | 3.42 | 3.82 | 4.59 | 5.58 | 6.17 | 7.91 | 9.34 | 10.5 | 14.7 | 17.5 | 19.6 | | | | | | |
| | | 3000 to 4000 100 V | 0.59 | 0.71 | 0.99 | 1.18 | 1.49 | 1.78 | 2.00 | 2.24 | 2.69 | 3.27 | 3.61 | 4.63 | 5.47 | 6.15 | 8.60 | 10.2 | 12.9 | 15.4 | 17.2 | 19.6 | | | |
| | | 3000 to 4000 200 V | 0.76 | 0.91 | 1.27 | 1.52 | 1.91 | 2.28 | 2.57 | 2.87 | 3.44 | 4.19 | 4.63 | 5.93 | 7.01 | 7.88 | 11.0 | 13.1 | 16.5 | 19.6 | | | | | |
| | Rotational direction | | Same as motor rotational direction | | | | | | | Reverse to motor rotational direction | | | | | | Same as motor rotational direction | | | | | | | | | |

## Permissible load inertia moment (×10⁻⁴ kg·m²)

| Reduction ratio | 3 | 3.6 | 5 | 6 | 7.5 | 9 | 10 | 12.5 | 15 | 18 | 20 | 25 | 30 | 36 | 50 | 60 | 75 | 90 | 100 | 120 | 150 | 180 | 200 |
|---|---|---|---|---|---|---|---|---|---|---|---|---|---|---|---|---|---|---|---|---|---|---|---|
| Applicable Gear head MZ9G□B／MY9G□B | 5.93 | 8.47 | 16.4 | 23.6 | 37.3 | 53.4 | 67.6 | 98.3 | 142 | 211 | 257 | 423 | 589 | 847 | 1684 | | | | | | | | |

## Permissible shaft load

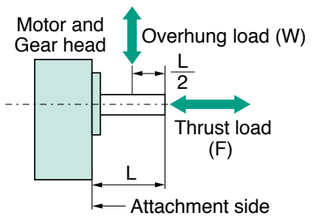


| | | Overhung load (W) | Thrust load (F) |
|---|---|---|---|
| Motor shaft (Round shaft) | Output 130 W | 150 N | 20 N |
| Applicable Gear head | MZ9G□B MY9G□B | 588 N | 147 N |

## Wiring diagram

• **In Case of 3-Phase 200 V**

*When you use single phase, connect the main power between L1 and L2 terminals.

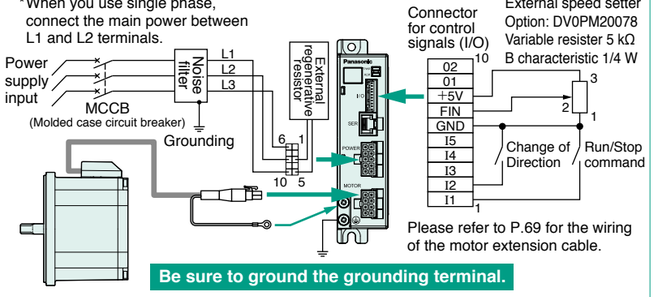


Please refer to P.69 for the wiring of the motor extension cable.

**Be sure to ground the grounding terminal.**

In wiring to power supply (outside of equipment) from MCCB, use an electric wire of 1.6 mm diameter (2.0 mm²) or more both for main circuit and grounding. Apply grounding class D (100 Ω or below) for grounding. Do not tighten the ground wires together, but connect them individually.

## Speed-torque characteristic

〈Dotted line shows a characteristic curve when supply voltage drops by 10 %.〉

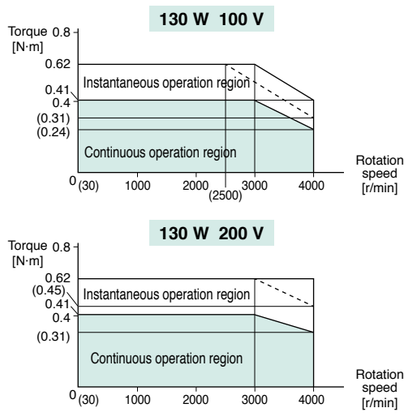


* Please refer to P.95 Support option.
* Before using, be sure to read "Instruction manual" to check precautions and correct procedure.



## Motor (dimensions)

Unit mm

mass 1.2 kg

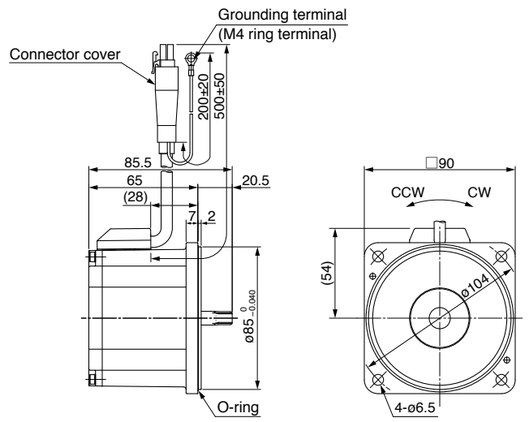


<Round shaft type>

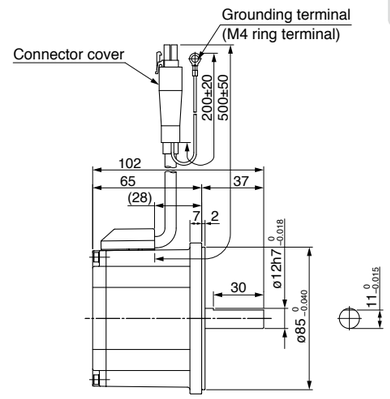


## Gear head (dimensions)

Unit mm

**MZ9G□B** (Ball bearing/Hinge not attached) mass 1.4 kg

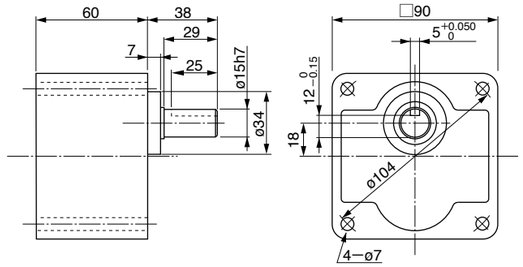


**MY9G□B** (Ball bearing/Hinge attached) mass 1.4 kg

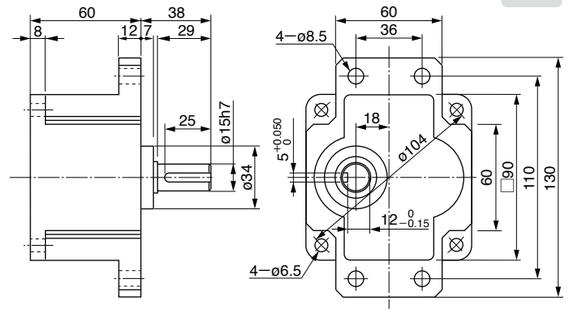


## Brushless amplifier (dimensions)

Unit mm

mass 0.37 kg

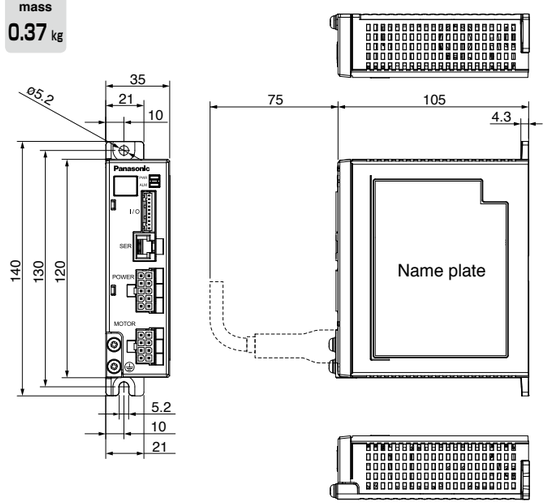


<Key and keyway [attachment]>

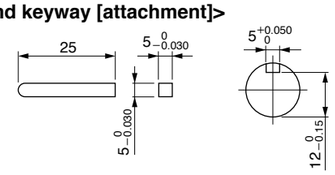


<Cautions> Dimensions are subject to change without notice. Contact us or a dealer for the latest information.

## Outline of gear head

### Reduction ratio

• 22 reduction ratios from 1/3 to 1/180 are available for the X type; 23 reduction ratios from 1/3 to 1/200 are available for the Y and Z types.

### Gear type

X: 50 W
Z: 90 W, 130 W (Hinge not attached)
Y: 90 W, 130 W (Hinge attached)

• Hinge not attached

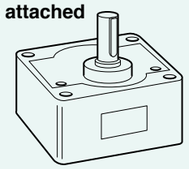

• Hinge attached

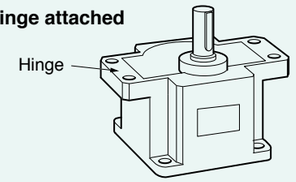


### Backlash

Less than 2° (design value)

■ **Type of gear head and reduction ratio**

| Gear type | Motor capacity | Reduction ratio | | | | | | | | | | | | | | | | | | | | | | | |
|---|---|---|---|---|---|---|---|---|---|---|---|---|---|---|---|---|---|---|---|---|---|---|---|---|---|
| | | 1/3 | 1/3.6 | 1/5 | 1/6 | 1/7.5 | 1/9 | 1/10 | 1/12.5 | 1/15 | 1/18 | 1/20 | 1/25 | 1/30 | 1/36 | 1/50 | 1/60 | 1/75 | 1/90 | 1/100 | 1/120 | 1/150 | 1/180 | 1/200 |
| X | 50 W | ○ | ○ | ○ | ○ | ○ | ○ | ○ | ○ | ○ | ○ | ○ | ○ | ○ | ○ | ○ | ○ | ○ | ○ | ○ | ○ | ○ | ○ | – |
| Z, Y | 90 W, 130 W | ○ | ○ | ○ | ○ | ○ | ○ | ○ | ○ | ○ | ○ | ○ | ○ | ○ | ○ | ○ | ○ | ○ | ○ | ○ | ○ | ○ | ○ | ○ |

### Check the Model number

**M Z 9 G 30 B**

- **Output Type**
  X : 50 W
  Z, Y : 90 W, 130 W
- **Size**
  8 : 80 mm sq.
  9 : 90 mm sq.
- **Gear head**
- **Reduction ratio**
  (Example) 30: Reduction ratio of 1/30
- **Bearing**
  B : Ball bearing

* The motor and gear are sold separately.

### Calculation of torque at output shaft of gear head

■ **Standard gear head only**

$$N_G = \frac{N_M}{i}$$

$$T_G = T_M \times i \times \eta$$

$N_G$ : Speed of gear head 〔r/min〕
$N_M$ : Motor speed 〔r/min〕
$i$ : Reduction ratio of gear head
$T_G$ : Output torque of gear head 〔N·m〕
$T_M$ : Motor torque 〔N·m〕
$\eta$ : Gear head efficiency

### Maximum permissible torque

There is a limit to the strength of a gear due to its material and construction. The usable load torque determined based on this limit is called permissible torque. As can be seen from the above-mentioned formula, the load becomes larger when the reduction ratio is increased. If the gear head is used with the load exceeding the permissible torque, its life expectancy will be shortened significantly. Refer to the right graph and the permissible torque for each model and use the gear head at an appropriate load.

■ **Maximum permissible torque**

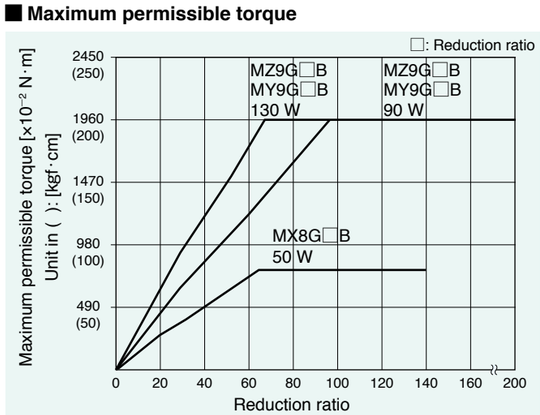




### Nominal reduction ratio and actual reduction ratio

Note that there is a difference between the nominal reduction ratio and actual reduction ratio of each gear head.
The numbers in the following table represents the denominator of the actual reduction ratio.

| Gear type | | Nominal reduction ratio | | | | | | | | | | | | | | | | | | | | | | |
|---|---|---|---|---|---|---|---|---|---|---|---|---|---|---|---|---|---|---|---|---|---|---|---|---|
| | | 1/3 | 1/3.6 | 1/5 | 1/6 | 1/7.5 | 1/9 | 1/10 | 1/12.5 | 1/15 | 1/18 | 1/20 | 1/25 | 1/30 | 1/36 | 1/50 | 1/60 | 1/75 | 1/90 | 1/100 | 1/120 | 1/150 | 1/180 | 1/200 |
| Actual reduction ratio | MX8G□B | 3.01 | 3.60 | 4.98 | 5.96 | 7.48 | 9.00 | 9.99 | 12.5 | 14.9 | 18.1 | 20.1 | 25.1 | 30.3 | 36.4 | 49.8 | 61.2 | 76.2 | 90.5 | 98.0 | 122.5 | 148.9 | 183.5 | — |
| | MZ9G□B<br>MY9G□B | 3.02 | 3.61 | 5.03 | 6.02 | 7.58 | 9.06 | 10.2 | 12.3 | 14.8 | 18.0 | 19.9 | 25.5 | 30.1 | 36.1 | 50.9 | 60.5 | 76.0 | 89.8 | 98.6 | 121.2 | 150.4 | 182.1 | 202.1 |

### Gear head efficiency

| Gear type | Nominal reduction ratio | | | | | | | | | | | | | | | | | | | | | | | |
|---|---|---|---|---|---|---|---|---|---|---|---|---|---|---|---|---|---|---|---|---|---|---|---|---|
| | 1/3 | 1/3.6 | 1/5 | 1/6 | 1/7.5 | 1/9 | 1/10 | 1/12.5 | 1/15 | 1/18 | 1/20 | 1/25 | 1/30 | 1/36 | 1/50 | 1/60 | 1/75 | 1/90 | 1/100 | 1/120 | 1/150 | 1/180 | 1/200 |
| MX8G□B | 81 % | | | | | | | | | | | | 75 % | | | | | | | | | | — |
| MZ9G□B<br>MY9G□B | 81 % | | | | | | | 79 % | | | | | | 70 % | | | | | | | | | |

### Gear head efficiency and ambient temperature

Calculate the actual gear head efficiency by multiplying the above-shown gear head efficiency at room temperature by the torque reduction ratio shown right.

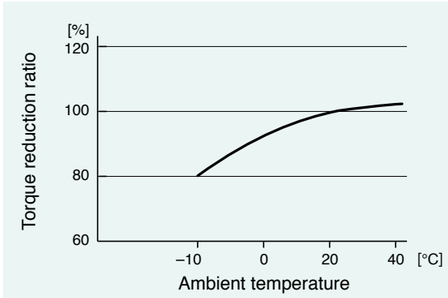


### Standard life

Standard life is 5000 hours for the motor equipped with gear head. Standard life of the motor without gear head (round shaft) is 10000 hours (however, effective life of the oil seal is 5000 hours).
Standard life is the designed lifetime predicted based on assumption that it is operated 8 hours/day (service factor: Sf = 1.0) under uniform loading (gear head allowable shaft torque, motor rated torque) at normal temperature and humidity.
Typical motor life can be determined as follows:
Example: Motor speed 3000 r/min to 4000 r/min
Standard life (hours) = 5000 (hours) × 3000 (r/min) / operating speed (r/min)

### Service factor (Sf)

$$\text{Life expectancy} = \frac{\text{Standard life}}{\text{Service factor (Sf)}}$$

Service factor (Sf) varies with impact of load and operation time. The table below shows how the service factor value depends on load condition.

| Type of load | Typical load | Service factor | | |
|---|---|---|---|---|
| | | 5 hours/day | 8hours/day | 24hours/day |
| Constant | Belt conveyor, One-directional rotation | 1.0 | 1.0 | 1.5 |
| Light-impact | Start/Stop, Cam-drive | 1.2 | 1.5 | 2.0 |
| Medium-impact | Instant FWD/REV, Instant stop | 1.5 | 2.0 | 2.5 |
| Heavy-impact | Frequent medium-impact | 2.5 | 3.0 | 3.5 |

**<Important>**
The gear heads MB8G□BV and MB9G□BV are designed for use with GP series, and MX8G□B, MZ9G□B and MY9G□B are designed for use with GV series, respectively, and they are not compatible with gear heads of different series.

# Gear head GV series

## Model list of gear head

### Gear head

#### ■ Ball bearing

| Size | Reduction ratio | Model No. | | | Hinge |
|---|---|---|---|---|---|
| **80 mm sq.** (50 W) | 1/3, 1/3.6, 1/5, 1/6, 1/7.5, 1/9, 1/10, 1/12.5, 1/15, 1/18 | **MX8G3B** | to | **MX8G18B** | |
| | 1/20, 1/25, 1/30, 1/36 | **MX8G20B** | to | **MX8G36B** | |
| | 1/50, 1/60, 1/75, 1/90, 1/100, 1/120, 1/150, 1/180 | **MX8G50B** | to | **MX8G180B** | |
| **90 mm sq.** (90 W·130 W Common use) | 1/3, 1/3.6, 1/5, 1/6, 1/7.5, 1/9 | **MZ9G3B** | to | **MZ9G9B** | |
| | 1/10, 1/12.5, 1/15, 1/18 | **MZ9G10B** | to | **MZ9G18B** | |
| | 1/20, 1/25, 1/30, 1/36, 1/50, 1/60 | **MZ9G20B** | to | **MZ9G60B** | |
| | 1/75, 1/90, 1/100, 1/120, 1/150, 1/180, 1/200 | **MZ9G75B** | to | **MZ9G200B** | |
| | 1/3, 1/3.6, 1/5, 1/6, 1/7.5, 1/9 | **MY9G3B** | to | **MY9G9B** | ○ |
| | 1/10, 1/12.5, 1/15, 1/18 | **MY9G10B** | to | **MY9G18B** | ○ |
| | 1/20, 1/25, 1/30, 1/36, 1/50, 1/60 | **MY9G20B** | to | **MY9G60B** | ○ |
| | 1/75, 1/90, 1/100, 1/120, 1/150, 1/180, 1/200 | **MY9G75B** | to | **MY9G200B** | ○ |

* For the specifications for each item, refer to the page of the motor to which it can be applied.

### Gear head accessory

#### ■ Ball bearing

| Size | Reduction ratio | Model No. | | | Accessory | | | |
|---|---|---|---|---|---|---|---|---|
| | | | | | Screw (mm) | Flat washer | Hexagon nut | Key |
| **80 mm sq.** | 1/3 to 1/180 | **MX8G3B** | to | **MX8G180B** | **M5 × 55 pan head screw : 4** | **for M5: 4** | **M5 : 4** | **4×4×25 one-end round : 1** |
| **90 mm sq.** | 1/3 to 1/200 | **MZ9G3B** | to | **MZ9G200B** | **M6 × 85 hexagon socket head bolt : 4** | **for M6: 4** | **M6 : 4** | **5×5×25 one-end round : 1** |
| | 1/3 to 1/200 | **MY9G3B** | to | **MY9G200B** | **M6 × 25 hexagon socket head bolt : 4** | **for M6: 4** | **M6 : 4** | **5×5×25 one-end round : 1** |

#### ■ O-ring

Repair parts 10pcs / bag

| Size | Part No. |
|---|---|
| **80 mm sq.** | **DV0PN10008** |
| **90 mm sq.** | **DV0PN10009** |

- Assemble with motor pinion faced up.
- Outward direction of motor leadwire can be aligned with any one of 4 sides of gear head with an output shaft at a different position.

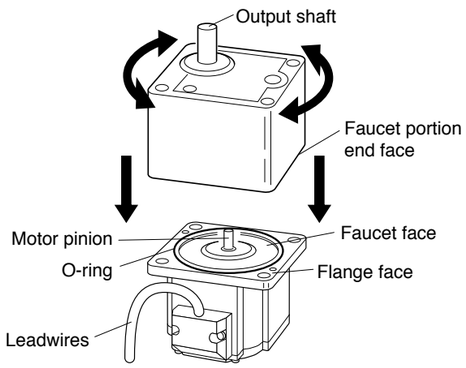




# MINAS-BL KV series

**Speed Control Type** 50 W to 750 W


• 60 mm square 200 W

**Contents**

# Check the model number

**<Motor>** **MBMS 08 2 B L ○**

Type

- **Motor rated output**
  5A : 50 W
  01 : 100 W
  02 : 200 W
  04 : 400 W
  08 : 750 W
- **Input power supply**
  1 : 100 V
  2 : 200 V
  Z : 100 V/200 V
- **Rated rotation speed**
  B: 3000 r/min
- **Mounting method**
  L : Flange type
- **Motor specifications**
  ○: Refer to the table below.

| | | Shaft | | |
|---|---|---|---|---|
| | | Round | Keyway, center tap | D-cut |
| Oil seal | without | A | S | N |
| | with | C | U | Q |

**<Brushless amplifier>** **MBEK 08 3 B C V**

Type

- **Motor rated output**
  5A : 50 W
  01 : 100 W
  02 : 200 W
  04 : 400 W
  08 : 750 W
- **Input power supply**
  1: Single phase AC100 V to 120 V
  3: 3-phase AC200 V to 240 V
  5: Single phase/ 3-phase AC200 V to 240 V
- **Function 1**
  B: with circuit for regenerative resistor
- **Function 2**
  C: RS485 communication,
  Signal input/Sink type (NPN transistor)
  D: RS485 communication,
  Signal input/Source type (PNP transistor)
  Source type made to order item.
  Please contact us if you'd like detailed information.
- **Control mode**
  V: speed control

# Brushless motor specifications

| Item | Specifications | | | | | | |
|---|---|---|---|---|---|---|---|
| Flange size | 38 mm sq. | 60 mm sq. | | | | | 80 mm sq. |
| Motor model No. *1 | MBMS5AZBL○ | MBMS011BL○ | MBMS012BL○ | MBMS021BL○ | MBMS022BL○ | MBMS042BL○ | MBMS082BL○ |
| Motor rated output (W) | 50 | 100 | | 200 | | 400 | 750 |
| Voltage (V) | for 100/200 | for 100 | for 200 | for 100 | for 200 | for 200 | |
| Rated torque (N·m) | 0.16 | 0.32 | | 0.64 | | 1.27 | 2.4 |
| Starting torque*2 (N·m) | 0.30 | 0.70 | | 1.4 | | 3.0 | 5.2 |
| Rated input current (A(rms)) | 0.74 | 1.4 | 0.76 | 2.9 | 1.8 | 2.8 | 3.6 |
| Moment of inertia of rotor ($\times 10^{-4}$ kg·m$^2$) | 0.025 | 0.07 | | 0.14 | | 0.26 | 0.87 |
| Rating | Continuous | | | | | | |
| Rated rotation speed*3 (r/min) | 3000 | | | | | | |
| Speed control range (r/min) | 100 to 4000 | | | | | | |
| Ambient temperature | 0 °C to +40 °C (free from freezing)<br>* Ambient temperature is measured at a distance of 5 cm from the motor. | | | | | | |
| Ambient humidity | 20 % to 85 % RH (free from condensation) | | | | | | |
| Altitude | Lower than 1000 m | | | | | | |
| Vibration | 24.5 m/s$^2$ or less X,Y,Z (Center of frame) | | | | | | |
| Motor insulation class | 130(B) | | | | | | |
| Protection structure | IP65*4,*5 | | | | | | |
| Number of poles | 8 | | | | | | |
| Motor mass (kg) | 0.32 | 0.63 | | 0.80 | | 1.2 | 2.3 |

*1 Suffix of "○" in the motor model represents shape of shaft.
*2 Representative value
*3 Motor shaft speed: to be multiplied by the reduction ratio when the gear head is used.
*4 Excluding the shaft pass-through section and cable end connector.
*5 These motors conform to the test conditions specified in EN standards (EN60529, EN60034-5).
Do not use these motors in application where water proof performance is required such as continuous wash-down operation.

**Overload protection characteristics**

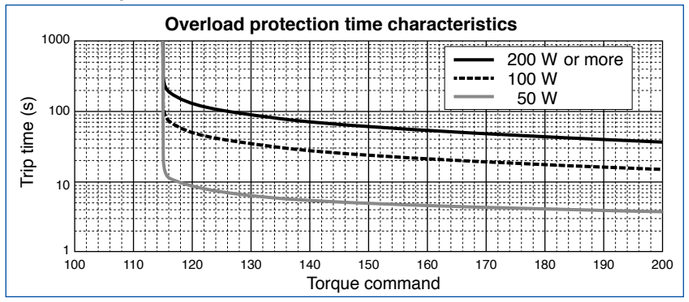


• 100 of the torque command represents the rated torque.



# Brushless amplifier specifications (KV series)

| Item | | Specifications | | | | | | | | | | | |
|---|---|---|---|---|---|---|---|---|---|---|---|---|---|
| Amplifier model No. | | MBEK5A1BCV | MBEK5A5BCV | | MBEK011BCV | MBEK015BCV | | MBEK021BCV | MBEK025BCV | | MBEK045BCV | | MBEK083BCV |
| Applicable Motor *1 | | MBMS5AZBL○ | | | MBMS011BL○ | MBMS012BL○ | | MBMS021BL○ | MBMS022BL○ | | MBMS042BL○ | | MBMS082BL○ |
| Motor rated output (W) | | 50 | | | 100 | | | 200 | | | 400 | | 750 |
| Input power supply voltage (V) | | Single phase 100 to 120 | Single phase | 3-phase | Single phase 100 to 120 | Single phase | 3-phase | Single phase 100 to 120 | Single phase | 3-phase | Single phase | 3-phase | 3-phase |
| | | | 200 to 240 | | | 200 to 240 | | | 200 to 240 | | 200 to 240 | | |
| Frequency (Hz) | | 50/60 | | | | | | | | | | | |
| Rated input current (A) | | 1.8 | 0.9 | 0.5 | 2.4 | 1.3 | 0.7 | 4.2 | 2.1 | 1.2 | 3.8 | 2.1 | 4.0 |
| Voltage tolerance | | ±10 % | | | | | | | | | | | |
| Control method | | Speed control by CS signal, PWM sine wave driving system | | | | | | | | | | | |
| Ambient temperature | | 0 °C to +50 °C (free from freezing)<br>* Ambient temperature is measured at a distance of 5 cm from the amplifier. | | | | | | | | | | | |
| Ambient humidity | | 20 % to 85 % RH (free from condensation) | | | | | | | | | | | |
| Location | | Indoor (No corrosive gas, A place without garbage, and dust) | | | | | | | | | | | |
| Altitude | | Lower than 1000 m | | | | | | | | | | | |
| Vibration | | 5.9 m/s$^2$ or less (10 Hz to 60 Hz) | | | | | | | | | | | |
| Protection structure/ Cooling system | | Equivalent to IP20/ Self cooling | | | | | | | | | | | |
| Storage temperature | | Normal temperature<br>* Temperature which is acceptable for a short time, such as during transportation is –20 °C to 60 °C (free from freezing) | | | | | | | | | | | |
| Storage humidity | | Normal humidity | | | | | | | | | | | |
| Rated rotation speed | | 3000 r/min | | | | | | | | | | | |
| Speed control range | | 100 r/min to 4000 r/min | | | | | | | | | | | |
| Speed fluctuation factor | With load | ±0.5 % or below (at 0 to Rated torque, Rated rotation speed) | | | | | | | | | | | |
| | With voltage | ±0.5 % or below (at supply voltage ±10 %, rated rotation speed) | | | | | | | | | | | |
| | With temperature | ±0.5 % or below (at 0 °C to 50 °C, rated rotation speed) | | | | | | | | | | | |
| Acceleration/ Deceleration time | | 0.01 sec to 300 sec (time for changing 1000 r/min)*2 | | | | | | | | | | | |
| Stopping procedure | | Slowdown stop/ Free-run stop*2 | | | | | | | | | | | |
| Speed setting | | 0 r/min to 4000 r/min (analogue voltage (0 V to 5 V), console A),<br>0 r/min to 4000 r/min (Setting selection by parameter on Digital key pad) | | | | | | | | | | | |
| Speed setting resolution | | Analog: approx. 1/200 of upper speed limit Digital: 1 r/min | | | | | | | | | | | |
| Speed setting precision (at 20 °C) | | Analogue: ±3 % or below of upper speed limit (±90 r/min or below at upper speed limit 3000 r/min)<br>[Digital: 1 % or below of upper speed limit ] | | | | | | | | | | | |
| Operation mode | | 8 speed | | | | | | | | | | | |
| Signal input | | 5 inputs*2 (run/ stop, CW run/ CCW run, multi function 3 bit) | | | | | | | | | | | |
| Signal output | | 2 outputs (Open collector)*2 (Trip output etc) | | | | | | | | | | | |
| Communication function | RS485 | Max 31 units. Setting of parameter, monitoring of control condition.<br>Communication speed: Choose from 2400 bps/ 4800 bps/ 9600 bps | | | | | | | | | | | |
| | RS232 | Setting of parameter and monitoring of control condition are enabled with commercial PC.*3 | | | | | | | | | | | |
| Digital key pad | | Setting of parameter, monitoring of control condition.*4 | | | | | | | | | | | |
| Protective function | | Warning : Undervoltage*2, Overload warning, setting change warning<br>Protect : Undervoltage*2, Overload, Overcurrent, Overvoltage, Overheat, Overspeed, Sensor error, RS485 communication error, External forced trip error, User parameter error, CPU error | | | | | | | | | | | |
| Regenerating brake | | Regenerative braking resistor can be externally connected.*5<br>Instantaneous braking torque 200 %, Continuous regenerative ability of external regenerative resistor: 10 W<br>(Regenerative operation with which motor shaft is rotated by load, e.g. load lowering operation, should not be continued.) | | | | | | | | | | | |
| Protection level | | Protection level: torque command 115 (inverse time characteristics) | | | | | | | | | | | |
| Amplifier mass (kg) | | 0.37 (50 W, 100 W) / 1.0 (200 W to 750 W) | | | | | | | | | | | |

*1 Suffix of "○" in the motor model represents shape of shaft. *2 Can be changed from PANATERM for BL or Digital key pad.
*3 PANATERM for BL (Download from our web site.), PC connection cable (DV0P4140), Digital key pad connection cable (DV0P383*0) is required. If your PC does not have RS232 port, use RS232-USB converter.
*4 Digital key pad connection cable (DV0P383*0) is required. *5 Use optional external regenerative resistor (sold separately).

# System configuration (50 W, 100 W)

| Power supply | Rated rotation speed (r/min) | output (W) | Motor (Note 1) | Brushless amplifier | Brushless amplifier (supplied with power cable) (Note 2) | Optional parts: External regenerative resistor | Optional parts: Noise filter | Optional parts: Surge absorber | Optional parts: Reactor |
|---|---|---|---|---|---|---|---|---|---|
| | | | | | Reference page | p. 74 | p. 71 | p. 67 | p. 67 | p. 73 |
| Single phase 100 V | 3000 | 50 | MBMS5AZBL○ | MBEK5A1BCV | MBEK5A1BCVC | for 100 V DV0P2890 | for single phase power supply DV0P4170 | for single phase power supply DV0P4190 | for single phase power supply DV0P227 |
| | | 100 | MBMS011BL○ | MBEK011BCV | MBEK011BCVC | | | | |
| Single/ 3-phase 200 V | | 50 | MBMS5AZBL○ | MBEK5A5BCV | MBEK5A5BCVC | for 200 V DV0PM20068 | for single phase power supply DV0P4170 for 3-phase power supply DV0PM20042 | for single phase power supply DV0P4190 for 3-phase power supply DV0P1450 | for single phase power supply DV0P227 for 3-phase power supply DV0P220 |
| | | 100 | MBMS012BL○ | MBEK015BCV | MBEK015BCVC | | | | |

(Note 1) ○ : Refer to the table below.

| | | Shaft shape: Round | Keyway, center tap | D-cut |
|---|---|---|---|---|
| Oil seal | Without | A | S | N |
| | With | C | U | Q |

(Note 2) Refer to p. 74 for a power supply connecting cable.
This part number is the ordering part number for the amplifier and power cable, not for ordering amplifier only.
* When installing the reactor, refer to p. 73.

*** Be sure to use a set of matched components (power source, capacity, output, etc.)**
*** This motor is not provided with a holding brake. If it is used to drive a vertical shaft, the movable section may fall down by its own weight as power is turned off.**

## ■ Options

| Optional parts | | Parts number | Reference page |
|---|---|---|---|
| Motor extension cable | 1 m | DV0PQ1000310 | P.69 |
| | 3 m | DV0PQ1000330 | |
| | 5 m | DV0PQ1000350 | |
| | 10 m | DV0PQ10003A1 | |
| Power supply connector kit | | DV0P2870 | P.70 |
| Console A*1 | | DV0P3500 | P.68 |
| Console A connection cable | 1 m | DV0PM2006910 | P.68 |
| | 3 m | DV0PM2006930 | |
| | 5 m | DV0PM2006950 | |
| Digital key pad*2 | | DV0P3510 | P.68 |

| Optional parts | | Parts number | Reference page |
|---|---|---|---|
| Digital key pad connection cable | 1 m | DV0P38310 | P.68 |
| | 3 m | DV0P38330 | |
| | 5 m | DV0P38350 | |
| External speed setter | | DV0PM20078 | P.71 |
| Control signal cable | 2 m | DV0PM20076 | P.70 |
| I/O connector kit | | DV0PM20070 | P.71 |
| Panel connector kit | | DV0P3610 | P.71 |
| PC connection cable*3 | 1.5 m | DV0P4140 | P.70 |
| Noise filter for signal line | | DV0P1460 | P.67 |
| DIN rail mounting unit | | DV0P3811 | P.72 |

* For details of cable, refer to p. 68 to p. 70.
*1 When using Console A, the Console A connection cable (DV0PM20069*0) is required.
*2 When using Digital key pad, the Digital key pad connection cable (DV0P383*0) is required.
*3 When connecting PC, the PC connection cable (DV0P4140) and the Digital key pad connection cable (DV0P383*0) are required.

## ■ Wiring equipment

Selection of circuit breaker (MCCB), magnetic contactor and electric wire. (To check conformity with international standards, refer to p. 93 Conformity with international safety standards.)

| Voltage | Power capacity | MCCB Rated current | Magnetic contactor Rated Current (Contact composition) | Core of electric wire ($mm^2$): Main circuit, Grounding | Control circuit |
|---|---|---|---|---|---|
| Single phase 100 V | 50 W, 100 W | 5 A | 20 A (3P+1a) | 0.5 (AWG20) | 0.13 (AWG26) |
| Single phase 200 V | | | | | |
| 3-phase 200 V | | | | | |

■ **Be sure to connect the earth terminal to ground.**
In wiring to power supply (outside of equipment) from MCCB, use an electric wire of 1.6 mm diameter (2.0 $mm^2$) or more both for main circuit and grounding. Apply grounding class D (100 Ω or below) for grounding.

● **Selection of relay**
A relay used in a control circuit, e.g. at the control input terminal should be small signal relay (Min. guaranteed current 1 mA or less) for positive contact. <Example> Panasonic: DS type, HC type OMRON: G2A type

● **Selection of control circuit switch**
When using a switch in place of relay, select a switch rated at minute electric current, to assure positive contact.
<Example> Nihon Kaiheiki Ind.: M-2012J-G

● **The wiring of SER and I/O connector**
The wiring of SER and I/O connector should separate from power line to prevent malfunction.

● **Wiring to the I/O connector**
Permissible length for control signal cable is 5 m or less.



# System configuration diagram (50 W, 100 W)

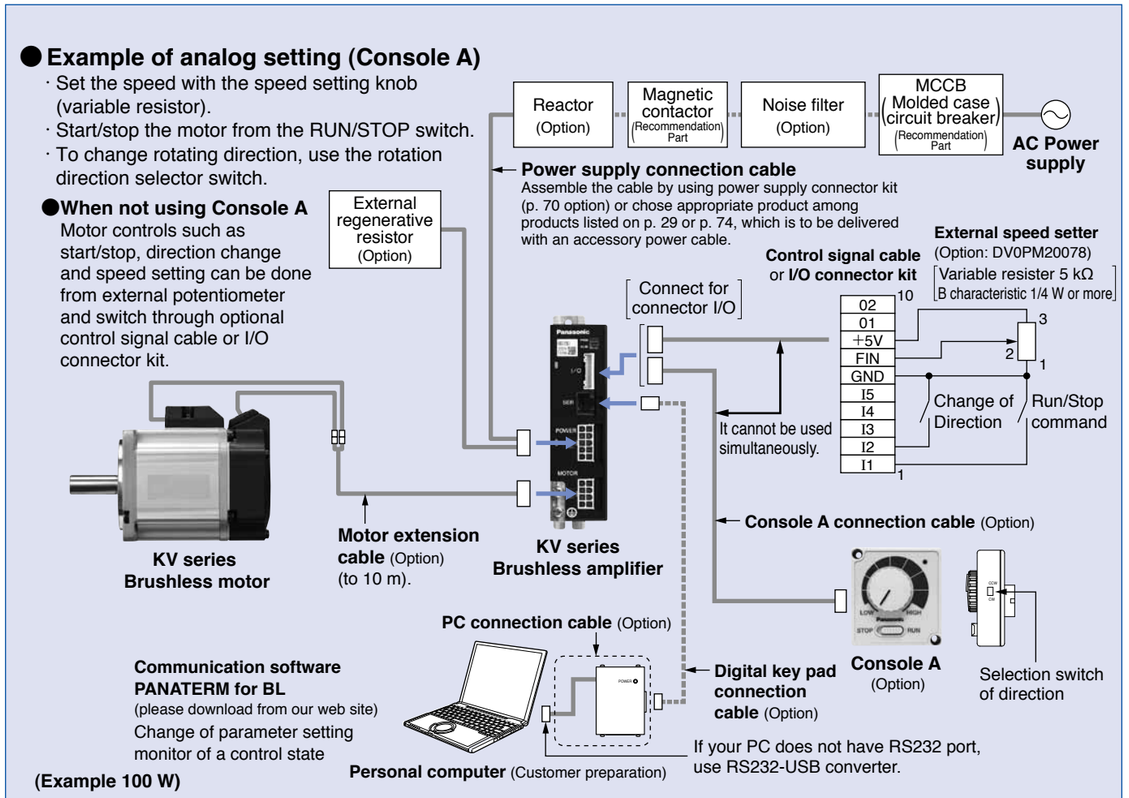

# System configuration (200 W to 750 W)

| Power supply | Rated rotation speed (r/min) | output (W) | Motor (Note 1) | Brushless amplifier | Optional parts: External regenerative resistor | Noise filter | Surge absorber | Reactor |
|---|---|---|---|---|---|---|---|---|
| | | | | | Reference page p. 71 | p. 67 | p. 67 | p. 73 |
| Single phase 100 V | 3000 | 200 | MBMS021BL○ | MBEK021BCV | for 100 V DV0P2890 | for single phase power supply DV0P4170 | for single phase power supply DV0P4190 | for single phase power supply DV0P228 |
| Single/ 3-phase 200 V | | 200 | MBMS022BL○ | MBEK025BCV | for 200 V DV0PM20068 | for single phase power supply DV0P4170 | for single phase power supply DV0P4190 | for single phase power supply DV0P227 |
| | | 400 | MBMS042BL○ | MBEK045BCV | | for 3-phase power supply DV0PM20042 | for 3-phase power supply DV0P1450 | for 3-phase power supply DV0P220 |
| 3-phase 200 V | | 750 | MBMS082BL○ | MBEK083BCV | | for 3-phase power supply DV0PM20042 | for 3-phase power supply DV0P1450 | for 3-phase power supply DV0P220 |

(Note 1) ○ : Refer to the table below.

| | | Shaft shape: Round | Keyway, center tap | D-cut |
|---|---|---|---|---|
| Oil seal | Without | A | S | N |
| | With | C | U | Q |

* When installing the reactor, refer to p. 73.

*** Be sure to use a set of matched components (power source, capacity, output, etc.)**
*** This motor is not provided with a holding brake. If it is used to drive a vertical shaft, the movable section may fall down by its own weight as power is turned off.**

## ■ Options

| Optional parts | | Parts number | Reference page |
|---|---|---|---|
| Motor extension cable | 1 m | DV0PQ1000310 | P.69 |
| | 3 m | DV0PQ1000330 | |
| | 5 m | DV0PQ1000350 | |
| | 10 m | DV0PQ10003A1 | |
| Console A*1 | | DV0P3500 | P.68 |
| Console A connection cable | 1 m | DV0PM2006910 | P.68 |
| | 3 m | DV0PM2006930 | |
| | 5 m | DV0PM2006950 | |
| Digital key pad*2 | | DV0P3510 | P.68 |

| Optional parts | | Parts number | Reference page |
|---|---|---|---|
| Digital key pad connection cable | 1 m | DV0P38310 | P.68 |
| | 3 m | DV0P38330 | |
| | 5 m | DV0P38350 | |
| External speed setter | | DV0PM20078 | P.71 |
| Control signal cable | 2 m | DV0PM20076 | P.70 |
| I/O connector kit | | DV0PM20070 | P.71 |
| Panel connector kit | | DV0P3610 | P.71 |
| PC connection cable*3 | 1.5 m | DV0P4140 | P.70 |
| Noise filter for signal line | | DV0P1460 | P.67 |

* For details of cable, refer to p. 68 to p. 70.

*1 When using Console A, the Console A connection cable (DV0PM20069*0) is required.
*2 When using Digital key pad, the Digital key pad connection cable (DV0P383*0) is required.
*3 When connecting PC, the PC connection cable (DV0P4140) and the Digital key pad connection cable (DV0P383*0) are required.

## ■ Wiring equipment

Selection of circuit breaker (MCCB), magnetic contactor and electric wire. (To check conformity with international standards, refer to p. 93 Conformity with international safety standards.)

| Voltage | Power capacity | MCCB Rated current | Magnetic contactor Rated Current (Contact composition) | Core of electric wire ($mm^2$): Main circuit, Grounding | Control circuit |
|---|---|---|---|---|---|
| Single phase 100 V | 200 W | 10 A | 20 A (3P＋1a) | 0.75 (AWG18) | 0.13 (AWG26) |
| Single phase 200 V | 200 W | 5 A | | | |
| | 400 W | 10 A | | | |
| 3-phase 200 V | 400 W, 200 W | 5 A | | | |
| | 750 W | 10 A | | | |

**■ Be sure to connect the earth terminal to ground.**
In wiring to power supply (outside of equipment) from MCCB, use an electric wire of 1.6 mm diameter (2.0 $mm^2$) or more both for main circuit and grounding. Apply grounding class D (100 Ω or below) for grounding.

**● Selection of relay**
A relay used in a control circuit, e.g. at the control input terminal should be small signal relay (Min. guaranteed current 1 mA or less) for positive contact. <Example> Panasonic: DS type, HC type OMRON: G2A type

**● Selection of control circuit switch**
When using a switch in place of relay, select a switch rated at minute electric current, to assure positive contact.
<Example> Nihon Kaiheiki Ind.: M-2012J-G

**● The wiring of SER and I/O connector**
The wiring of SER and I/O connector should separate from power line to prevent malfunction.

**● Wiring to the I/O connector**
Permissible length for control signal cable is 5 m or less.



# System configuration diagram (200 W to 750 W)

## ● Example of analog setting (Console A)

· Set the speed with the speed setting knob (variable resistor).
· Start/stop the motor from the RUN/STOP switch.
· To change rotating direction, use the rotation direction selector switch.

**●When not using Console A**
Motor controls such as start/stop, direction change and speed setting can be done from external potentiometer and switch through optional control signal cable or I/O connector kit.

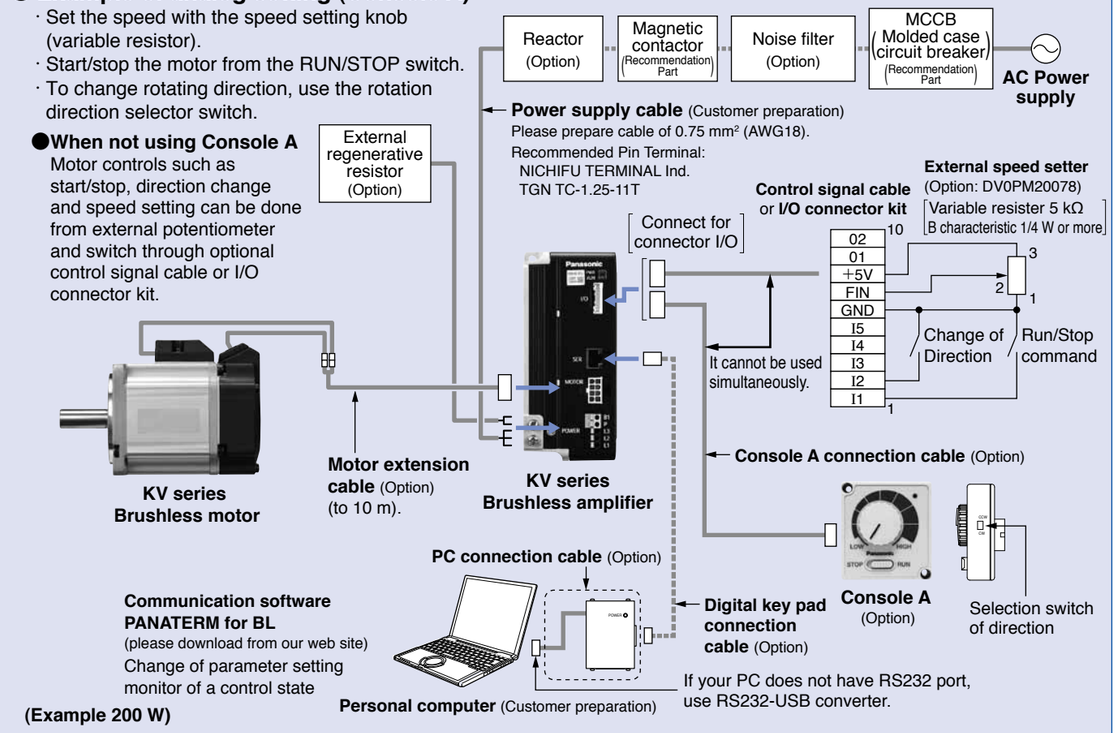


(Example 200 W)

## ● Example of digital setting (Digital key pad)

• To start/stop the motor, use RUN/STOP key
• Digital monitor [Rotation speed, Commanded speed, Internal DC voltage, Load factor, Torque, Trip history, Overload warning (flashing)]
• Set/change parameters
• Storage of the parameters (read, write)

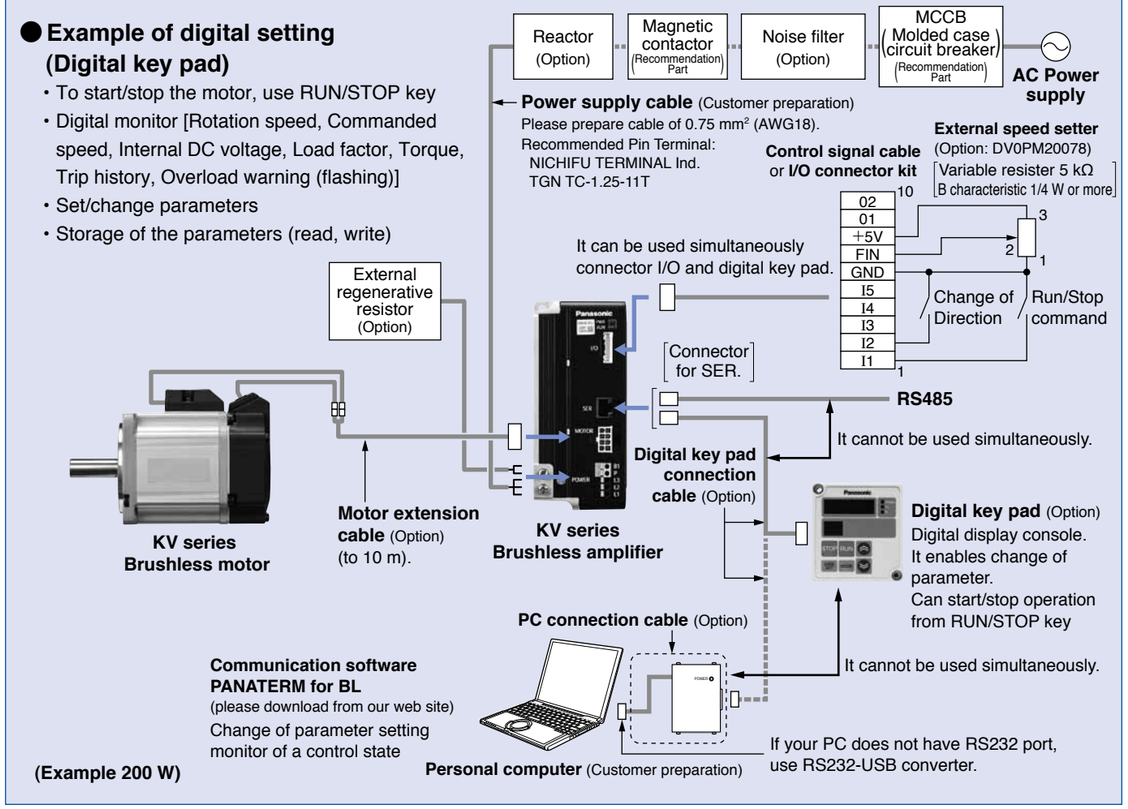


(Example 200 W)

# Parameter list of brushless amplifier

| Parameter No. | Parameter name | Explanation | Setting range |
|---|---|---|---|
| 00 | Internal speed (0-th speed) | Desired running speed can be set with the Digital key pad. | 0 r/min to Upper speed limit [Minimum unit 1 r/min] |
| 01 to 07 | 1st speed to 7th speed | Speed in multi-speed running can be set. | 0 r/min to Upper speed limit [Minimum unit 1 r/min] |
| 10<br>11 | 1st acceleration time<br>2nd acceleration time | The change factor of output speed in acceleration can be determined. Set by time for changing 1000 r/min. | 0.01 sec to 300 sec<br>to 3 sec: Incremented by 0.01 second<br>3 sec to 30 sec: Incremented by 0.1 second<br>30 sec to 300 sec: Incremented by 1 second |
| 12<br>13 | 1st deceleration time<br>2nd deceleration time | The change factor of output speed in deceleration can be determined. Set by time for changing 1000 r/min. | |
| 14<br>15 | Acceleration mode selection<br>Deceleration mode selection | Straight line acceleration/deceleration and curve (S-shape) acceleration and deceleration can be chosen individually for acceleration and deceleration.<br> 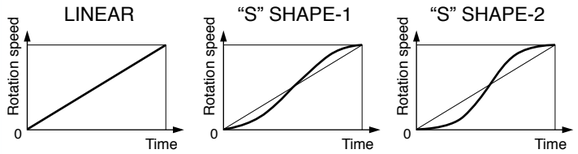 | Select S-shape when "31 Speed command selection" is PnL. |
| 16 | Stop mode selection | You can select how to stop the motor when stop command is input: free-run stop or stop after deceleration. | |
| 17 | Free-run waiting time | When the stop mode is set to deceleration stop, the zero speed (servo lock time) after deceleration can be adjusted. | 0.0 sec to 10.0 sec [Minimum unit 0.1 sec] |
| 1A | Velocity loop proportional gain | Enables setting of proportional gain of velocity amplifier. | 0 to 10000 [Minimum unit 0.1] |
| 1b | Velocity loop integration gain | Enables setting of integration gain of velocity amplifier. | 0 to 10000 [Minimum unit 0.1] |
| 30 | Run command selection | Run command can be applied through: Digital key pad, input terminal "I1", "I2" or RS485 communication, whichever selected. | |
| 31 | Speed command selection | You can choose whether to use "00 Internal speed (0-th speed)" or analog input terminal for speed command. | |
| 32 | Operation mode selection | Parameter for choosing operation mode<br>Setting / Operation made / Function of signal input (I3, I4, I5)<br>1: 1st speed operation mode — Free-run stop, External forced trip, 2nd Acc./Dec. time, Trip reset<br>2: 2nd speed operation mode — I3: Speed setting; I4: Free-run stop, External forced trip, 2nd Acc./Dec. time, Trip reset<br>4: 4th speed operation mode — I3: Speed setting; I4: Speed setting<br>8: 8th speed operation mode — I3: Speed setting; I4: Speed setting; I5: Speed setting | |
| 33<br>34<br>35<br>36 | I1/I2 function selection<br>I3 function selection<br>I4 function selection<br>I5 function selection | Signal input functions I1 to I5 can be individually selected. | Free-run stop<br>External forced trip<br>2nd Acc./Dec. time<br>Trip reset |
| 3A | Lower speed limit | When speed command selection is set to analog, set the motor speed at 0 V input.<br> 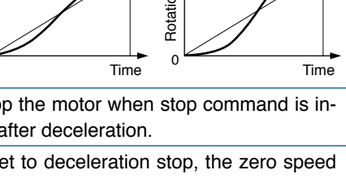 | 0 r/min to Upper speed limit [Minimum unit 1 r/min] |
| 3b | Upper speed limit | Upper limit of motor command speed. | 0 r/min to 4000 r/min [Minimum unit 1 r/min] |
| 3C | Torque limit | Set the upper limit of the output torque command. 100 represents the rated torque. [Minimum unit 1] | Rated output (W): 50, 100, 200, 400 — 750<br>Setting range: 0 to 200 — 0 to 180 |



| Parameter No. | Parameter name | Explanation | Setting range |
|---|---|---|---|
| 40<br>41 | O1 function selection<br>O2 function selection | The type of signals from output terminals "O1" and "O2" can be selected.<br>* Do not use it for position detector and positioning. | Trip: ON, Speed is reached to a command value: ON, Running: ON, Free run: ON, CCW run: ON, CW run: ON, Load exceeds 100 %: ON, Speed pulse signal* |
| 42<br>43 | O1 output polarity selection<br>O2 output polarity selection | This is a function for inverting the polarity of signal output terminal O1 and O2. | |
| 44 | Speed matching range | "Matching range" of arriving signal can be adjusted. | 20 r/min to Upper speed limit [Minimum unit 1 r/min] |
| 45 | Output pulse count selection | Set the number of pulses to be output to output terminals "O1" and "O2".<br>• When you use it in more than 3000 r/min, choose values less than 12.<br>• Do not use "the speed pulse" of the output signal (parameter No.45) for position sensing and a positioning use. | 1, 2, 3, 4, 6, 8, 12, 24 |
| 46 | Monitor mode selection | You can choose description to be displayed on 5-digit LED when turning on power. | Rotation speed, Speed command, Internal DC voltage, Load factor, Torque |
| 47<br>48 | Numerator of display magnification factor<br>Denominator of display magnification factor | By setting the multiplying factor of a value displayed on 5-digit LED, the rotation speed of gear output shaft and conveyor speed can be displayed. | |
| 4A | Trip history clear | Trip history can be cleared. | |
| 4b to 4F | Trip history 1 to Trip history 5 | Trip history for 5 times in the past is stored. | |
| 50 | Undervoltage trip selection | You can select whether tripping occurs upon detection of undervoltage. | |
| 51 | Retrial selection | Automatic reset in trip (trip retrial) can be set here. | |
| 52 | Retrial start time | You can set waiting time until retrial operation is performed after tripping is found. | 1 sec to 120 sec [Minimum unit 1 sec] |
| 54 | Parameter initializing | Parameters can be initialized to the factory default. | |
| 57 | Parameter copy | Parameters can be copied. | |
| 5A | RS485 device number | Set the device number of Amplifier in communication (Amplifier ID) | |
| 5b | RS485 communication speed | Set the communication speed of RS485 communication. | |
| 5C | RS485 communication standard | Set the communication standard of RS485 communication. | |
| 5d | RS485 communication response time | You can set the shortest time necessary to set the RS485 bus to transmission mode to response upon receiving communication data. | |
| 5E | RS485 retry times of communication | Set the retry times of RS485 communication. | |
| 5F | RS485 protocol timeout | You can set the permissible time interval between successively received character codes. | |

## • How to use Digital key pad

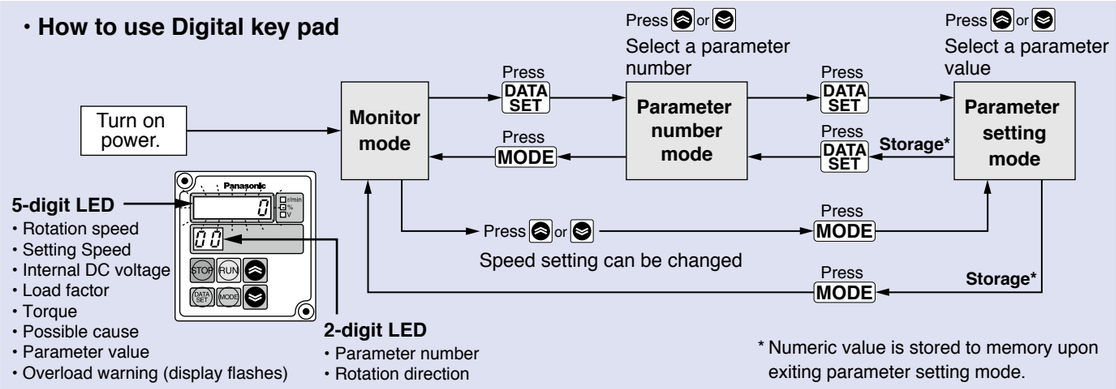

## Specification (For Common specification, see p. 27, p. 28)

| Size | Model No. / Amplifier and Motor: Brushless Amplifier (Model number in ( ) is shipped with power connection cable) | Motor | Rated output (W) | Input power supply for Amplifier: Voltage AC (V) | Allowed range (%) | Frequency (Hz) | Rated input current (A) | Rated torque (N·m) | Starting torque (N·m) | Rated speed (r/min) | Maximum rotation speed (r/min) |
|---|---|---|---|---|---|---|---|---|---|---|---|
| 38 mm sq. | MBEK5A1BCV (MBEK5A1BCVC) | MBMS5AZBL○ | 50 | Single phase 100 to 120 | ±10 | 50/60 | 1.8 | 0.16 | 0.30 | 3000 | 4000 |
| | MBEK5A5BCV (MBEK5A5BCVC) | | | Single phase /3-phase 200 to 240 | | | Single phase 0.9<br>3-phase 0.5 | | | | |

* Suffix of "○" in the motor model No. represents shape of shaft. Refer to the "Check the model number" p. 27. * Starting torque: Representative value

## Permissible shaft load

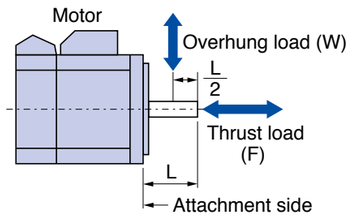


| | | Overhung load (W) | Thrust load (F) |
|---|---|---|---|
| Motor shaft | Output 50 W | 69 N | 59 N |

## Wiring diagram

**• In Case of 3-Phase 200 V**

*When you use single phase, connect the main power between L1 and L2 terminals.

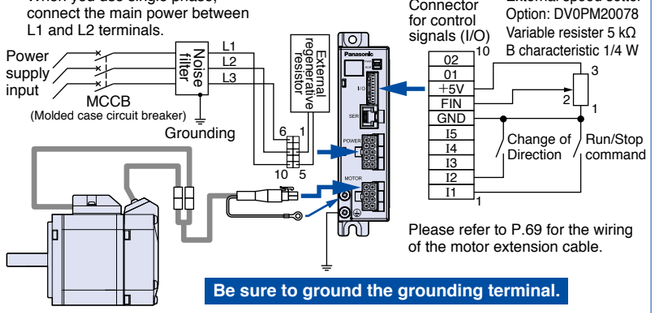


**Be sure to ground the grounding terminal.**

In wiring to power supply (outside of equipment) from MCCB, use an electric wire of 1.6 mm diameter (2.0 mm²) or more both for main circuit and grounding. Apply grounding class D (100 Ω or below) for grounding. Do not tighten the ground wires together, but connect them individually.

* Please refer to P.95 Support option.

## Speed-torque characteristic

〈Dotted line shows a characteristic curve when supply voltage drops by 10 %.〉

**50 W 100 V/ 200 V**

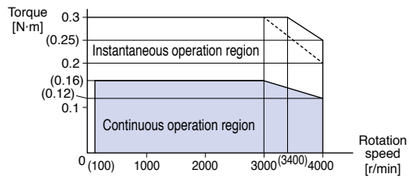


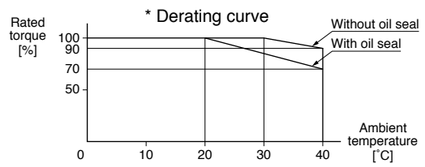


## Motor (dimensions)

Unit mm

mass 0.32 kg

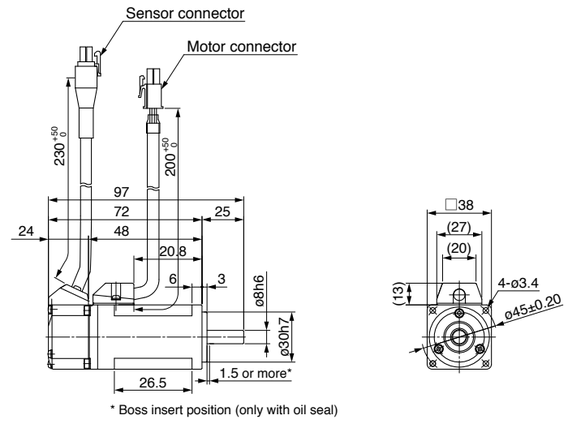


<Round shaft type>

<D-cut specification>

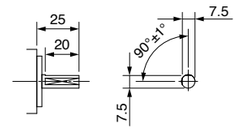


<Keyway, center tap>

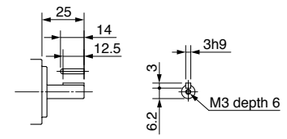


## Brushless amplifier (dimensions)

Unit mm

mass 0.37 kg

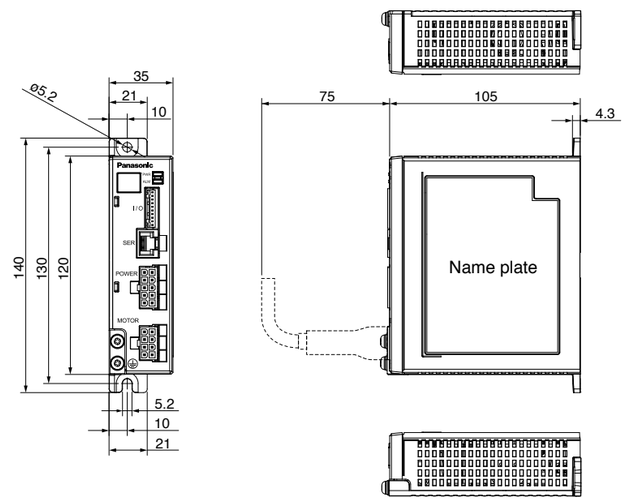


* Before using, be sure to read "Instruction manual" to check precautions and correct procedure.

<Cautions> Dimensions are subject to change without notice. Contact us or a dealer for the latest information.

## Specification (For Common specification, see p. 27, p. 28)

| Size | Model No. / Amplifier and Motor: Brushless Amplifier (Model number in ( ) is shipped with power connection cable) | Motor | Rated output (W) | Input power supply for Amplifier: Voltage AC (V) | Allowed range (%) | Frequency (Hz) | Rated input current (A) | Rated torque (N·m) | Starting torque (N·m) | Rated speed (r/min) | Maximum rotation speed (r/min) |
|---|---|---|---|---|---|---|---|---|---|---|---|
| 60 mm sq. | MBEK011BCV (MBEK011BCVC) | MBMS011BL○ | 100 | Single phase 100 to 120 | ±10 | 50/60 | 2.4 | 0.32 | 0.70 | 3000 | 4000 |
| | MBEK015BCV (MBEK015BCVC) | MBMS012BL○ | | Single phase /3-phase 200 to 240 | | | Single phase 1.3<br>3-phase 0.7 | | | | |

* Suffix of "○" in the motor model No. represents shape of shaft. Refer to the "Check the model number" p. 27. * Starting torque: Representative value

## Permissible shaft load

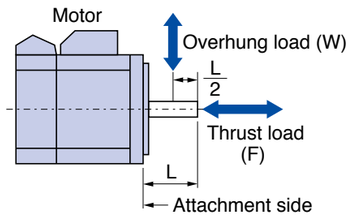


| | | Overhung load (W) | Thrust load (F) |
|---|---|---|---|
| Motor shaft | Output 100 W | 69 N | 59 N |

## Wiring diagram

**• In Case of 3-Phase 200 V**

*When you use single phase, connect the main power between L1 and L2 terminals.

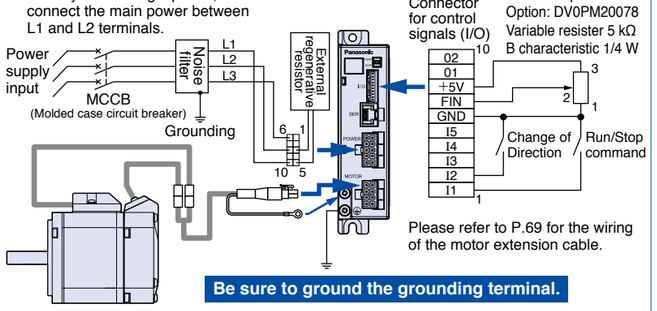


**Be sure to ground the grounding terminal.**

In wiring to power supply (outside of equipment) from MCCB, use an electric wire of 1.6 mm diameter (2.0 mm²) or more both for main circuit and grounding. Apply grounding class D (100 Ω or below) for grounding. Do not tighten the ground wires together, but connect them individually.

* Please refer to P.95 Support option.

## Speed-torque characteristic

〈Dotted line shows a characteristic curve when supply voltage drops by 10 %.〉

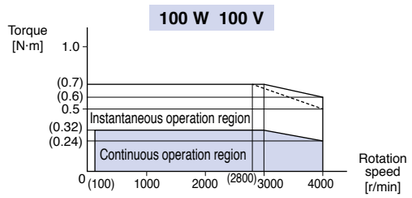


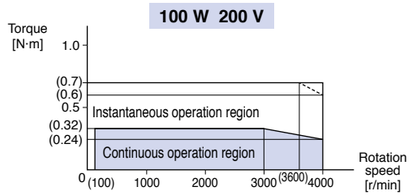


## Motor (dimensions)

Unit mm

mass 0.63 kg

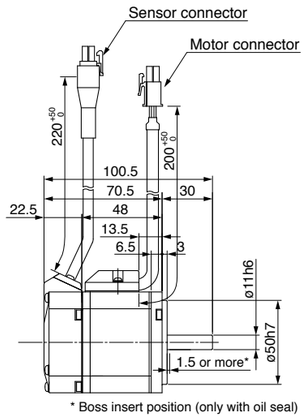


<Round shaft type>

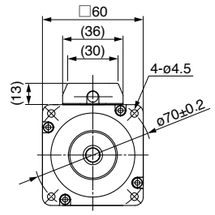


<D-cut specification>

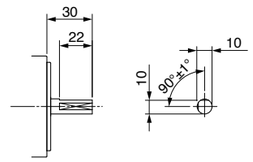


<Keyway, center tap>

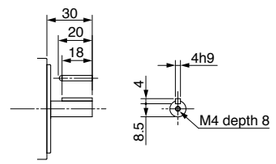


## Brushless amplifier (dimensions)

Unit mm

mass 0.37 kg

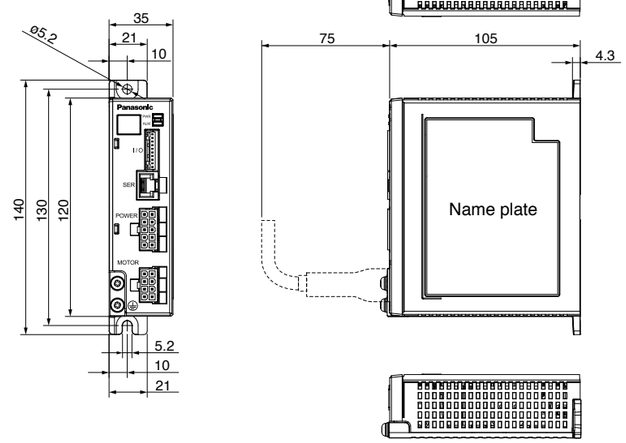

## Specification (For Common specification, see p. 27, p. 28)

| Size | Model No. / Amplifier and Motor: Brushless Amplifier | Motor | Rated output (W) | Input power supply for Amplifier: Voltage AC (V) | Allowed range (%) | Frequency (Hz) | Rated input current (A) | Rated torque (N·m) | Starting torque (N·m) | Rated speed (r/min) | Maximum rotation speed (r/min) |
|---|---|---|---|---|---|---|---|---|---|---|---|
| 60 mm sq. | MBEK021BCV | MBMS021BL○ | 200 | Single phase 100 to 120 | ±10 | 50/60 | 4.2 | 0.64 | 1.4 | 3000 | 4000 |
| | MBEK025BCV | MBMS022BL○ | | Single phase /3-phase 200 to 240 | | | Single phase 2.1<br>3-phase 1.2 | | | | |

* Suffix of "○" in the motor model No. represents shape of shaft. Refer to the "Check the model number" p. 27. * Starting torque: Representative value

## Permissible shaft load

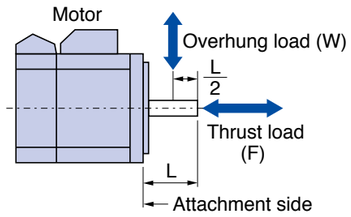


| | | Overhung load (W) | Thrust load (F) |
|---|---|---|---|
| Motor shaft | Output 200 W | 245 N | 98 N |

## Wiring diagram

• In Case of 3-Phase 200 V

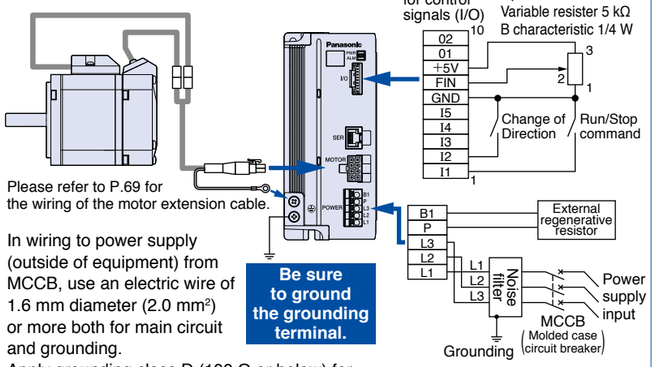


In wiring to power supply (outside of equipment) from MCCB, use an electric wire of 1.6 mm diameter (2.0 mm²) or more both for main circuit and grounding.
Apply grounding class D (100 Ω or below) for grounding. Do not tighten the ground wires together, but connect them individually.

*When you use single phase, connect the main power between L1 and L2 terminals.

Recommended Pin Terminal:
NICHIFU TERMINAL Ind.
TGN TC-1.25-11T

* Please refer to P.95 Support option.

## Speed-torque characteristic

〈Dotted line shows a characteristic curve when supply voltage drops by 10 %.〉

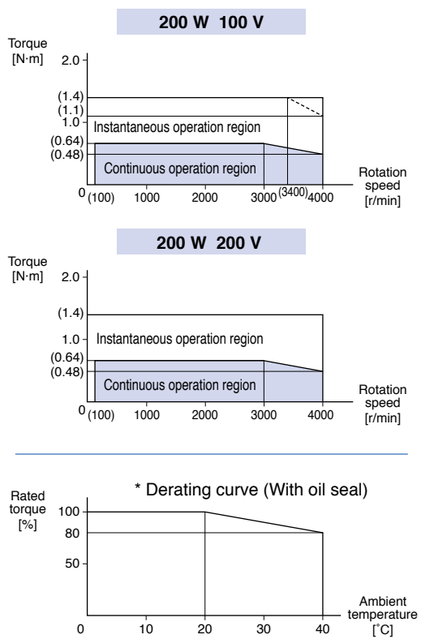


* Before using, be sure to read "Instruction manual" to check precautions and correct procedure.



## Motor (dimensions)

Unit mm

mass 0.8 kg

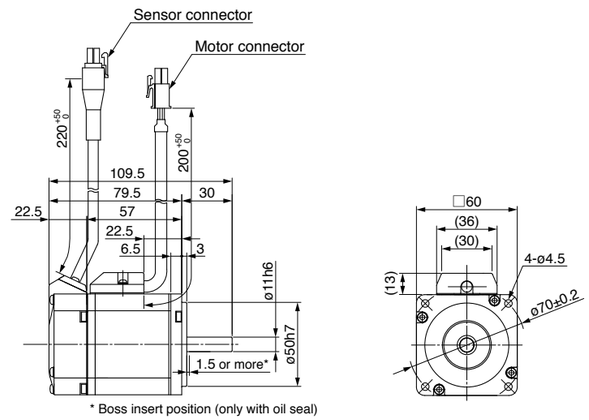


<Round shaft type>

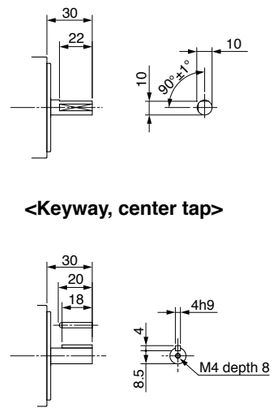


## Brushless amplifier (dimensions)

Unit mm

mass 1.0 kg

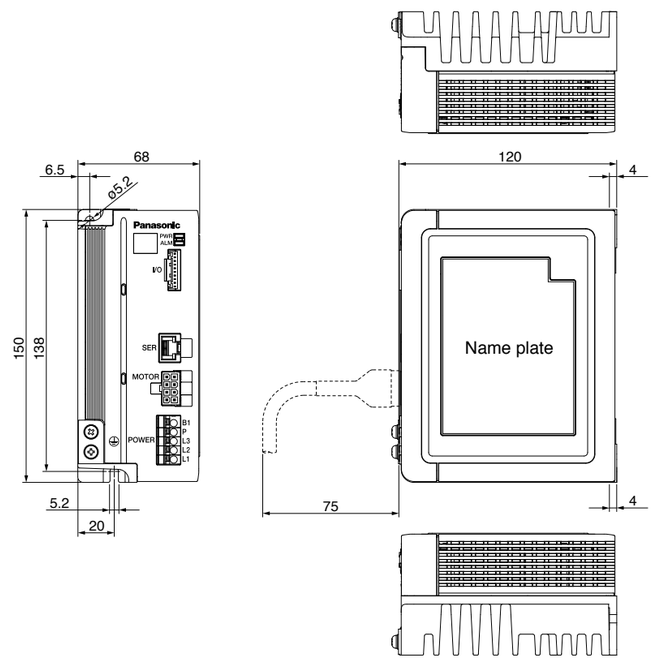


<Cautions> Dimensions are subject to change without notice. Contact us or a dealer for the latest information.

## Specification (For Common specification, see p. 27, p. 28)

| Size | Model No. / Amplifier and Motor: Brushless Amplifier | Model No. / Amplifier and Motor: Motor | Rated output (W) | Input power supply for Amplifier: Voltage AC (V) | Input power supply for Amplifier: Allowed range (%) | Input power supply for Amplifier: Frequency (Hz) | Input power supply for Amplifier: Rated input current (A) | Rated torque (N·m) | Starting torque (N·m) | Rated speed (r/min) | Maximum rotation speed (r/min) |
|---|---|---|---|---|---|---|---|---|---|---|---|
| 60 mm sq. | MBEK045BCV | MBMS042BL○ | 400 | Single phase /3-phase 200 to 240 | ±10 | 50/60 | Single phase 3.8<br>3-phase 2.1 | 1.27 | 3.0 | 3000 | 4000 |

* Suffix of "○" in the motor model No. represents shape of shaft. Refer to the "Check the model number" p. 27. * Starting torque: Representative value

## Permissible shaft load

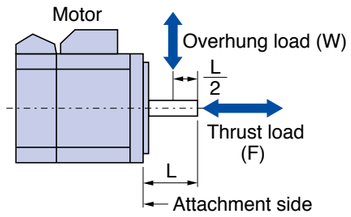


| | | Overhung load (W) | Thrust load (F) |
|---|---|---|---|
| Motor shaft | Output 400 W | 245 N | 98 N |

## Wiring diagram

• In Case of 3-Phase 200 V

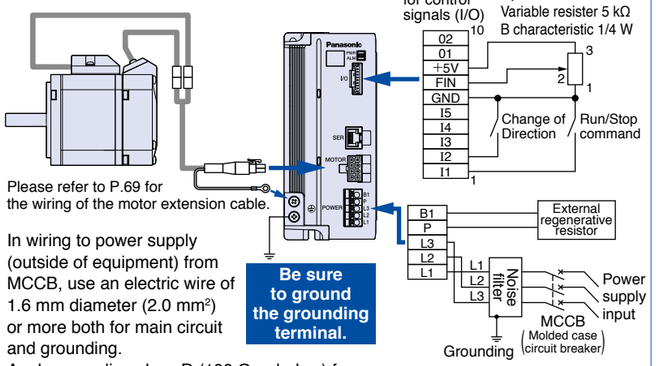


Please refer to P.69 for the wiring of the motor extension cable.

In wiring to power supply (outside of equipment) from MCCB, use an electric wire of 1.6 mm diameter (2.0 mm²) or more both for main circuit and grounding.
Apply grounding class D (100 Ω or below) for grounding. Do not tighten the ground wires together, but connect them individually.

*When you use single phase, connect the main power between L1 and L2 terminals.

Recommended Pin Terminal:
NICHIFU TERMINAL Ind.
TGN TC-1.25-11T

## Speed-torque characteristic

〈Dotted line shows a characteristic curve when supply voltage drops by 10 %.〉

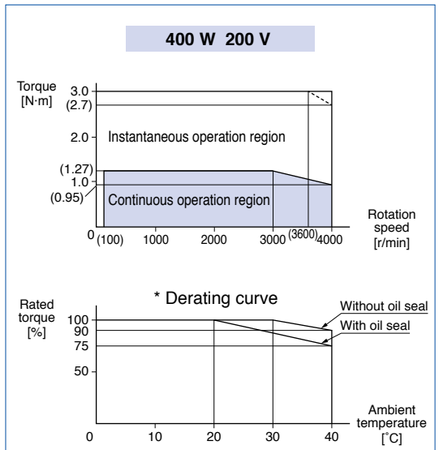


* Please refer to P.95 Support option.

* Before using, be sure to read "Instruction manual" to check precautions and correct procedure.



## Motor (dimensions)

Unit mm

mass 1.2 kg

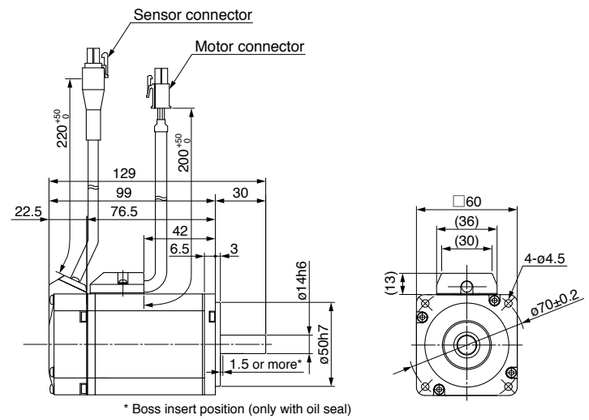


<Round shaft type>

<D-cut specification>

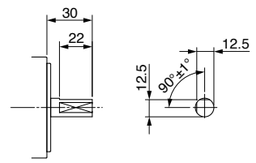


<Keyway, center tap>

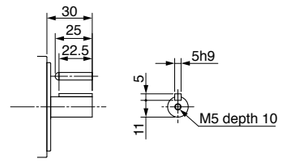


## Brushless amplifier (dimensions)

Unit mm

mass 1.0 kg

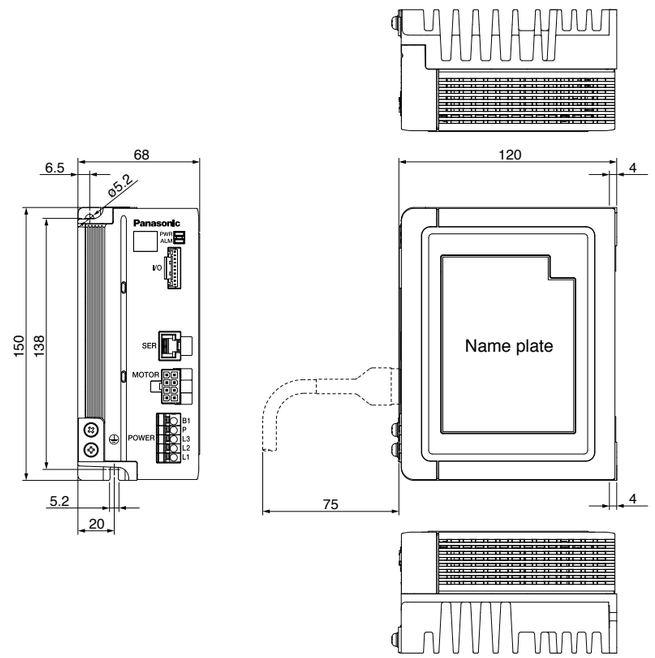


<Cautions> Dimensions are subject to change without notice. Contact us or a dealer for the latest information.

## Specification (For Common specification, see p. 27, p. 28)

| Size | Model No. / Amplifier and Motor: Brushless Amplifier (Model number in ( ) is shipped with power connection cable) | Motor | Rated output (W) | Input power supply for Amplifier: Voltage AC (V) | Allowed range (%) | Frequency (Hz) | Rated input current (A) | Rated torque (N·m) | Starting torque (N·m) | Rated speed (r/min) | Maximum rotation speed (r/min) |
|---|---|---|---|---|---|---|---|---|---|---|---|
| 80 mm sq. | MBEK083BCV | MBMS082BL○ | 750 | 3-phase 200 to 240 | ±10 | 50/60 | 4.0 | 2.4 | 5.2 | 3000 | 4000 |

* Suffix of "○" in the motor model No. represents shape of shaft. Refer to the "Check the model number" p. 27. * Starting torque: Representative value

## Permissible shaft load

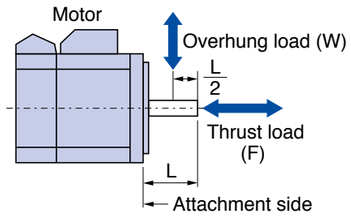


| | | Overhung load (W) | Thrust load (F) |
|---|---|---|---|
| Motor shaft | Output 750 W | 392 N | 147 N |

## Wiring diagram

• In Case of 3-Phase 200 V

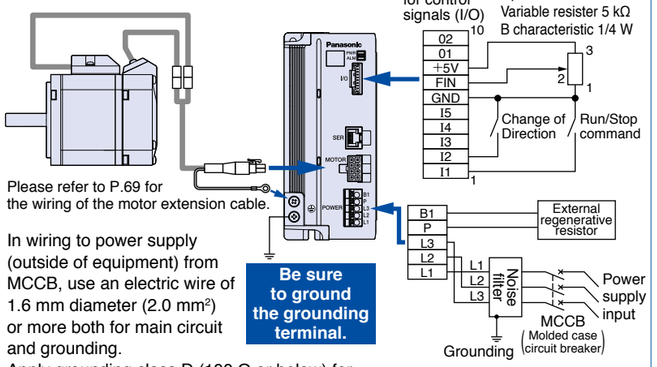


Please refer to P.69 for the wiring of the motor extension cable.

In wiring to power supply (outside of equipment) from MCCB, use an electric wire of 1.6 mm diameter (2.0 mm²) or more both for main circuit and grounding.
Apply grounding class D (100 Ω or below) for grounding. Do not tighten the ground wires together, but connect them individually.

Recommended Pin Terminal:
NICHIFU TERMINAL Ind.
TGN TC-1.25-11T

* Please refer to P.95 Support option.

## Speed-torque characteristic

〈Dotted line shows a characteristic curve when supply voltage drops by 10 %.〉

750 W 200 V

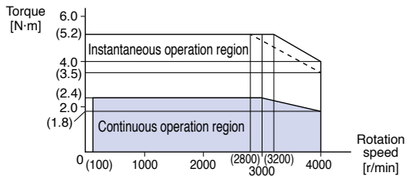


## Motor (dimensions)

Unit mm

mass 2.3 kg

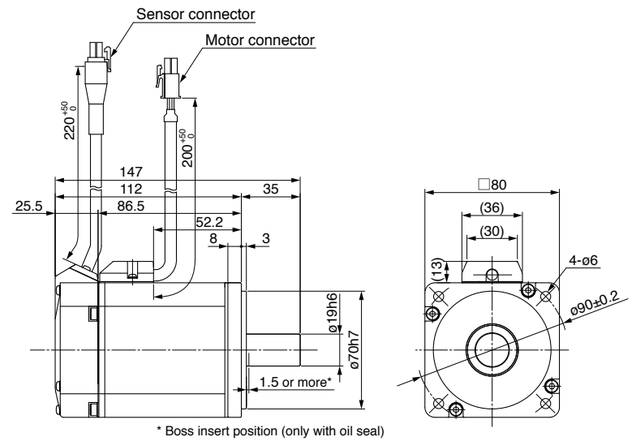


<Round shaft type>

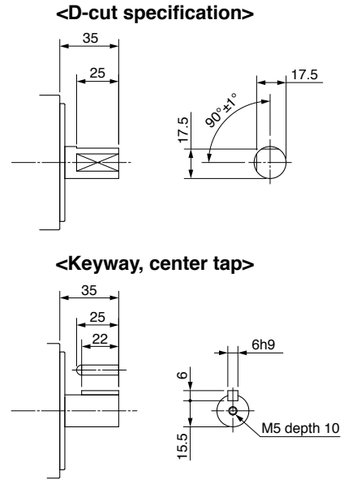


## Brushless amplifier (dimensions)

Unit mm

mass 1.0 kg

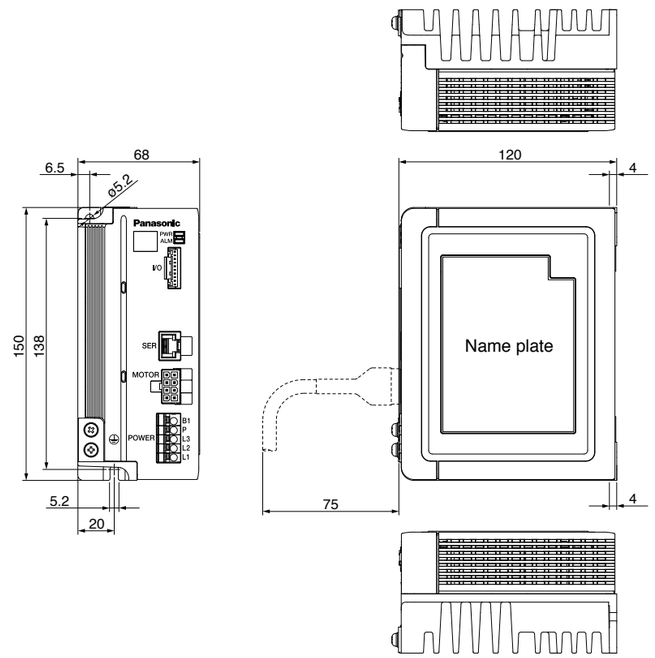


* Before using, be sure to read "Instruction manual" to check precautions and correct procedure.

<Cautions> Dimensions are subject to change without notice. Contact us or a dealer for the latest information.

MEMO



# MINAS-BL GP series

**Position Control Type** 50 W to 130 W


• 80 mm square 50 W

**Contents**

# Check the model number

**<Motor>** **MBMU 5A Z A B**

- **Type**: MBMU
- **Motor rated output**: 5A: 50 W; 9A: 90 W; 1E: 130 W
- **Input power supply**: 1: 100 V; 2: 200 V; Z: 100 V/200 V
- **Function**: A: Standard
- **Shape of shaft**: B: MB type Gear head

**<Gear head>** **M B 8 G 30 BV**

- **Gear head**: M B 8 G
- **Type**: B: For GP series
- **Size**: 8: 80 mm sq.; 9: 90 mm sq.
- **Reduction ratio**: (Example) 30: Reduction ratio of 1/30; 5, 10, 15, 20, 30, 50
- **Bearing**: BV: Ball bearing

**<Brushless amplifier>** **MBEG 5A 5 B C P**

- **Type**: MBEG
- **Motor rated output**: 5A: 50 W; 9A: 90 W; 1E: 130 W
- **Input power supply**: 1: Single phase AC100 V to 120 V; 5: Single phase/ 3-phase AC200 V to 240 V
- **Function 1**: B: with circuit for regenerative resistor
- **Function 2**: C: RS485 communication, Signal input/Sink type (NPN transistor); D: RS485 communication, Signal input/Source type (PNP transistor); Source type made to order item. Please contact us if you'd like detailed information.
- **Control mode**: P: position control

# Brushless motor specifications

| Item | Specifications | | | | |
|---|---|---|---|---|---|
| Flange size | 80 mm sq. | 90 mm sq. | | | |
| Motor model No. | MBMU5AZAB | MBMU9A1AB | MBMU9A2AB | MBMU1E1AB | MBMU1E2AB |
| Motor rated output (W) | 50 | 90 | | 130 | |
| Voltage (V) | for 100/200 | for 100 | for 200 | for 100 | for 200 |
| Rated torque (N·m) | 0.16 | 0.29 | | 0.41 | |
| Starting torque*1 (N·m) | 0.24 | 0.43 | | 0.62 | |
| Rated input current (A(rms)) | 0.53 | 1.00 | 0.50 | 1.30 | 0.72 |
| Moment of inertia of rotor ($\times 10^{-4}$ kg·m$^2$) | 0.12 | 0.27 | | 0.36 | |
| Rating | Continuous | | | | |
| Rated rotation speed*2 (r/min) | 3000 | | | | |
| Speed control range (r/min) | 30 to 4000 | | | | |
| Ambient temperature | –10 °C to +40 °C (free from freezing)<br>* Ambient temperature is measured at a distance of 5 cm from the motor. | | | | |
| Ambient humidity | 20 % to 85 % RH (free from condensation) | | | | |
| Altitude | Lower than 1000 m | | | | |
| Vibration | 4.9 m/s$^2$ or less X, Y, Z (Center of frame) | | | | |
| Motor insulation class | 130(B) | | | | |
| Protection structure | IP65*3,*4 | | | | |
| Number of poles | 8 | | | | |
| Motor mass (kg) | 0.7 | 1.0 | | 1.2 | |

*1 Representative value
*2 Motor shaft speed: to be multiplied by the reduction ratio when the gear head is used.
*3 Excluding the shaft pass-through section and cable end connector.
*4 These motors conform to the test conditions specified in EN standards (EN60529, EN60034-5).
Do not use these motors in application where water proof performance is required such as continuous wash-down operation.

## Overload protection characteristics

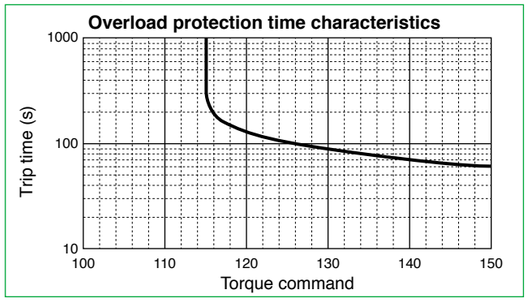


• 100 of the torque command represents the rated torque.



# Brushless amplifier specifications (GP series)

| Item | | Specifications | | | | | | | | |
|---|---|---|---|---|---|---|---|---|---|---|
| Amplifier model No. | | MBEG5A1BCP | MBEG5A5BCP | | MBEG9A1BCP | MBEG9A5BCP | | MBEG1E1BCP | MBEG1E5BCP | |
| Applicable Motor | | MBMU5AZAB | | | MBMU9A1AB | MBMU9A2AB | | MBMU1E1AB | MBMU1E2AB | |
| Motor rated output (W) | | 50 | | | 90 | | | 130 | | |
| Input power supply voltage (V) | | Single phase 100 to 120 | Single phase | 3-phase | Single phase 100 to 120 | Single phase | 3-phase | Single phase 100 to 120 | Single phase | 3-phase |
| | | | 200 to 240 | | | 200 to 240 | | | 200 to 240 | |
| Frequency (Hz) | | 50/60 | | | | | | | | |
| Rated input current (A) | | 1.5 | 0.7 | 0.35 | 2.2 | 1.1 | 0.5 | 2.8 | 1.5 | 0.7 |
| Voltage tolerance | | ±10 % | | | | | | | | |
| Control method | | Position control by CS signal, PWM sine wave driving system | | | | | | | | |
| Ambient temperature | | 0 °C to +50 °C (free from freezing)<br>* Ambient temperature is measured at a distance of 5 cm from the amplifier. | | | | | | | | |
| Ambient humidity | | 20 % to 85 % RH (free from condensation) | | | | | | | | |
| Location | | Indoor (No corrosive gas, A place without garbage, and dust) | | | | | | | | |
| Altitude | | Lower than 1000 m | | | | | | | | |
| Vibration | | 5.9 m/s$^2$ or less (10 Hz to 60 Hz) | | | | | | | | |
| Protection structure/ Cooling system | | Equivalent to IP20/ Self cooling | | | | | | | | |
| Storage temperature | | Normal temperature<br>* Temperature which is acceptable for a short time, such as during transportation is –20 °C to 60 °C (free from freezing) | | | | | | | | |
| Storage humidity | | Normal humidity | | | | | | | | |
| Number of positioning points | | 4 points<br>(Travel distance, speed, acceleration time, deceleration time, and relative/absolute can be set per point) | | | | | | | | |
| Positioning resolution | | 288 pulse/rotation (Accuracy: Within ±5° at 20 °C at no load) | | | | | | | | |
| Signal input | | 4 inputs | | | | | | | | |
| Signal output | | 2 outputs (Open collector) | | | | | | | | |
| Communication function | RS485 | Max 31 units. Setting of parameter, monitoring of control condition.<br>Communication speed: Choose from 2400 bps/ 4800 bps/ 9600 bps | | | | | | | | |
| | RS232 | Setting of parameter and monitoring of control condition are enabled with commercial PC.*1 | | | | | | | | |
| Digital key pad | | Parameter change, status monitor, etc. can be executed through the optional Digital key pad DV0P3510.*2 | | | | | | | | |
| Protective function | | Warning : Overload warning, Setting change warning<br>Protect : Overload, Overcurrent, Overvoltage, Undervoltage, System error, Over-speed, Sensor error, Overheat, Position error, External forced trip, Position error counter overflow, RS485 communication error, Operation execution error, Homing error, present position overflow, Hardware limit error, Digital key pad communication trouble, user parameter error, and system parameter error | | | | | | | | |
| Regenerating brake | | Regenerative braking resistor can be externally connected.*3<br>Instantaneous braking torque 200 %, Continuous regenerative ability of external regenerative resistor: 10 W<br>(Regenerative operation with which motor shaft is rotated by load, e.g. load lowering operation, should not be continued.) | | | | | | | | |
| Protection level | | Protection level: torque command 115 (inverse time characteristics) | | | | | | | | |
| Amplifier mass (kg) | | 0.37 | | | | | | | | |

*1 PANATERM for BL (Download from our web site.), PC connection cable (DV0P4140), Digital key pad connection cable (DV0P383*0) is required. If your PC does not have RS232 port, use RS232-USB converter.
*2 Digital key pad connection cable (DV0P383*0) is required. *3 Use optional external regenerative resistor (sold separately).

# System configuration

| Power supply | Rated rotation speed (r/min) | output (W) | Motor | Gear head (Note 1) | Brushless amplifier | Brushless amplifier (supplied with power cable) (Note 2) | Optional parts: External regenerative resistor | Optional parts: Noise filter | Optional parts: Surge absorber | Optional parts: Reactor |
|---|---|---|---|---|---|---|---|---|---|---|
| | | | | | | Reference page p. 74 | p. 71 | p. 67 | p. 67 | p. 73 |
| Single phase 100 V | 3000 | 50 | MBMU5AZAB | MB8G□BV | MBEG5A1BCP | MBEG5A1BCPC | for 100 V DV0P2890 | for single phase power supply DV0P4170 | for single phase power supply DV0P4190 | for single phase power supply DV0P227 |
| | | 90 | MBMU9A1AB | MB9G□BV | MBEG9A1BCP | MBEG9A1BCPC | | | | |
| | | 130 | MBMU1E1AB | MB9G□BV | MBEG1E1BCP | MBEG1E1BCPC | | | | |
| Single/ 3-phase 200 V | | 50 | MBMU5AZAB | MB8G□BV | MBEG5A5BCP | MBEG5A5BCPC | for 200 V DV0PM20068 | for single phase power supply DV0P4170 for 3-phase power supply DV0PM20042 | for single phase power supply DV0P4190 for 3-phase power supply DV0P1450 | for single phase power supply DV0P227 for 3-phase power supply DV0P220 |
| | | 90 | MBMU9A2AB | MB9G□BV | MBEG9A5BCP | MBEG9A5BCPC | | | | |
| | | 130 | MBMU1E2AB | MB9G□BV | MBEG1E5BCP | MBEG1E5BCPC | | | | |

(Note 1) A figure representing reduction ratio in □ .
(Note 2) Refer to p. 74 for a power supply connecting cable.
This part number is the ordering part number for the amplifier and power cable, not for ordering amplifier only.
* When installing the reactor, refer to p. 73.

*** Be sure to use a set of matched components (series, power source, capacity, output, etc.)**
*** This motor is not provided with a holding brake. If it is used to drive a vertical shaft, the movable section may fall down by its own weight as power is turned off.**

## ■ Options

| Optional parts | | Parts number | Reference page |
|---|---|---|---|
| Motor extension cable | 1 m | DV0PQ1000110 | P.69 |
| | 3 m | DV0PQ1000130 | |
| | 5 m | DV0PQ1000150 | |
| | 10 m | DV0PQ10001A1 | |
| Power supply connector kit | | DV0P2870 | P.70 |
| Digital key pad*1 | | DV0P3510 | P.68 |
| Digital key pad connection cable | 1 m | DV0P38310 | P.68 |
| | 3 m | DV0P38330 | |
| | 5 m | DV0P38350 | |

| Optional parts | | Parts number | Reference page |
|---|---|---|---|
| Control signal cable | 2 m | DV0PM20076 | P.70 |
| I/O connector kit | | DV0PM20070 | P.71 |
| PC connection cable*2 | 1.5 m | DV0P4140 | P.70 |
| Noise filter for signal line | | DV0P1460 | P.67 |
| DIN rail mounting unit | | DV0P3811 | P.72 |

* For details of cable, refer to p. 68 to p. 70.
*1 When using Digital key pad, the Digital key pad connection cable (DV0P383*0) is required.
*2 When connecting PC, the PC connection cable (DV0P4140) and the Digital key pad connection cable (DV0P383*0) are required.

## ■ Wiring equipment

Selection of circuit breaker (MCCB), magnetic contactor and electric wire. (To check conformity with international standards, refer to p. 93 Conformity with international safety standards.)

| Voltage | Power capacity | MCCB Rated current | Magnetic contactor Rated Current (Contact composition) | Core of electric wire ($mm^2$): Main circuit, Grounding | Core of electric wire ($mm^2$): Control circuit |
|---|---|---|---|---|---|
| Single phase 100 V | 50 W to 130 W | 5 A | 20 A (3P+1a) | 0.5 (AWG20) | 0.13 (AWG26) |
| Single phase 200 V | | | | | |
| 3-phase 200 V | | | | | |

■ **Be sure to connect the earth terminal to ground.**
In wiring to power supply (outside of equipment) from MCCB, use an electric wire of 1.6 mm diameter (2.0 $mm^2$) or more both for main circuit and grounding. Apply grounding class D (100 Ω or below) for grounding.

● **Selection of relay**
A relay used in a control circuit, e.g. at the control input terminal should be small signal relay (Min. guaranteed current 1 mA or less) for positive contact.
<Example> Panasonic: DS type, HC type OMRON: G2A type

● **Selection of control circuit switch**
When using a switch in place of relay, select a switch rated at minute electric current, to assure positive contact.
<Example> Nihon Kaiheiki Ind.: M-2012J-G

● **The wiring of SER and I/O connector**
The wiring of SER and I/O connector should separate from power line to prevent malfunction.

● **Wiring to the I/O connector**
Permissible length for control signal cable is 5 m or less.



# System configuration diagram

● **Example of digital setting (Digital key pad)**
- Various key operation, Homing, Teaching
- Digital Monitor [Rotation speed, Present position, Internal DC Voltage, Load factor, Torque, Trip history, Overload warning (flashing)]
- Set/change parameters
- Storage of the parameters (read, write)

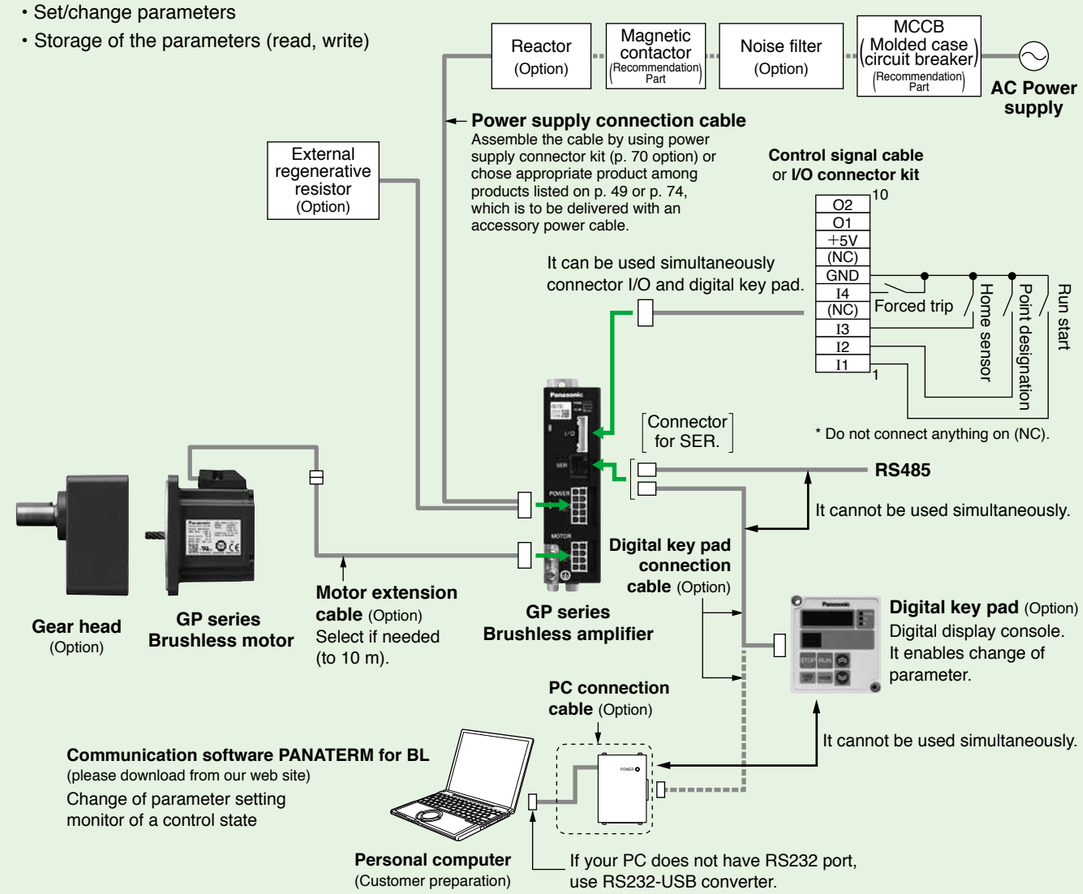


• **How to use Digital key pad**

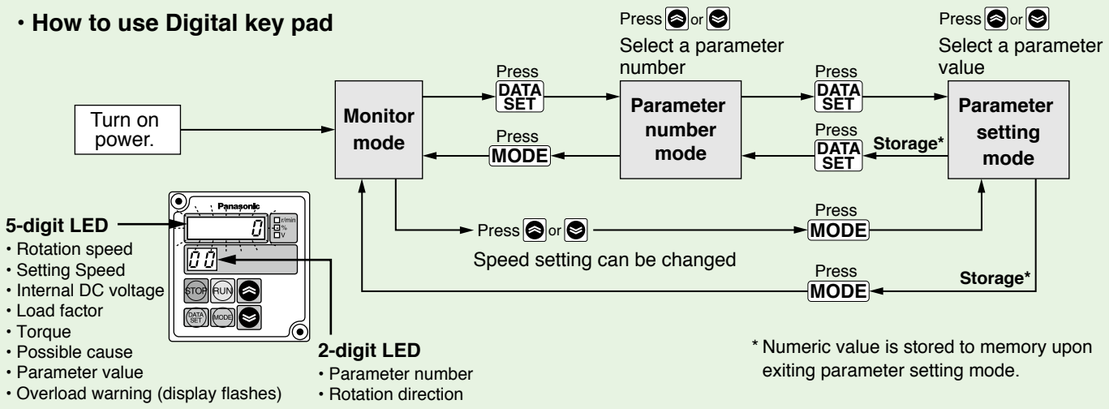


* Please refer to the operation manual overall on how to operate the teaching.
Please download the operation manual from our web site below.
http://industrial.panasonic.com/ww/products/motors-compressors/fa-motors

# Parameter list of brushless amplifier

| Parameter No. | | Parameter name | Explanation | Setting range |
|---|---|---|---|---|
| 00 | The 1st point | The 1st target position (rotation number) | You can set travel distance in rotation numbers and pulses. (288 pulses per rotation) | –16384 to 16383 |
| 01 | | The 1st target position (Pulse) | | –288 to 288 |
| 02 | | The 1st coordinate setting | You can select positioning system to the 1st point.<br>0: Relative travel, 1: Absolute travel | 0, 1 |
| 03 | | The 1st setting speed (r/min) | You can set the speed moving to the 1st point. | 0 to 4000 |
| 04 | | The 1st acceleration time (ms) | You can set time taken for reaching the 1st setting speed. | 1 to 30000 |
| 05 | | The 1st deceleration time (ms) | You can set time taken from the 1st setting speed to stop. | 1 to 30000 |
| 06 | | The 1st block setting | 0: Normal operation<br>1: Continuous block operation (1st point → 2nd point )<br>2: Combined block operation (1st point + 2nd point ) | 0 to 2 |
| 07 | | The 1st block timer setting (ms) | Start commanding of 2nd point after this setting time elapses and command of 1st point is completed. | 0 to 30000 |
| 08 | The 2nd point | The 2nd target position (rotation number) | You can set travel distance in rotation numbers and pulses. (288 pulses per rotation) | –16384 to 16383 |
| 09 | | The 2nd target position (pulse) | | –288 to 288 |
| 0A | | The 2nd coordinate setting | You can select positioning system to the 2nd point.<br>0: Relative travel, 1: Absolute travel | 0, 1 |
| 0b | | The 2nd setting speed (r/min) | You can set the speed moving to the 2nd point. | 0 to 4000 |
| 0C | | The 2nd acceleration time (ms) | You can set time taken for reaching the 2nd setting speed. | 1 to 30000 |
| 0d | | The 2nd deceleration time (ms) | You can set time taken from the 2nd setting speed to stop. | 1 to 30000 |
| 0E | | The 2nd block setting | 0: Normal operation, 1: Continuous block operation (2nd point → 3rd point ) | 0, 1 |
| 0F | | The 2nd block timer setting (ms) | Start commanding of 3rd point after this setting time elapses and command of 2nd point is completed. | 0 to 30000 |
| 10 | The 3rd point | The 3rd target position (rotation number) | You can set travel distance in rotation numbers and pulses. (288 pulses per rotation) | –16384 to 16383 |
| 11 | | The 3rd target position (Pulse) | | –288 to 288 |
| 12 | | The 3rd coordinate setting | You can select positioning system to the 3rd point.<br>0: Relative travel, 1: Absolute travel | 0, 1 |
| 13 | | The 3rd setting speed (r/min) | You can set the speed moving to the 3rd point. | 0 to 4000 |
| 14 | | The 3rd acceleration time (ms) | You can set time taken for reaching the 3rd setting speed. | 1 to 30000 |
| 15 | | The 3rd deceleration time (ms) | You can set time taken from the 3rd setting speed to stop. | 1 to 30000 |
| 16 | | The 3rd block setting | 0: Normal operation, 1: Continuous block operation (3rd point → 4th point)<br>2: Combined block operation (3rd point + 4th point) | 0 to 2 |
| 17 | | The 3rd block timer setting (ms) | Start commanding of 4th point after this setting time elapses and command of 3rd point is completed. | 0 to 30000 |
| 18 | The 4th point | The 4th target position (rotation number) | You can set travel distance in rotation numbers and pulses. (288 pulses per rotation) | –16384 to 16383 |
| 19 | | The 4th target position (Pulse) | | –288 to 288 |
| 1A | | The 4th coordinate setting | You can select positioning system to the 4th point.<br>0: Relative travel, 1: Absolute travel | 0, 1 |
| 1b | | The 4th setting speed (r/min) | You can set the speed moving to the 4th point. | 0 to 4000 |
| 1C | | The 4th acceleration time (ms) | You can set time taken for reaching the 4th setting speed. | 1 to 30000 |
| 1d | | The 4th deceleration time (ms) | You can set time taken from the 4th setting speed to stop. | 1 to 30000 |
| 1E | | The 4th block setting | 0: Normal operation, 1: Continuous block operation (4th point → 1st point) | 0, 1 |
| 1F | | The 4th block timer setting (ms) | Start commanding of 1st point after this setting time elapses and command of 4th point is completed. | 0 to 30000 |
| 20 | | Acceleration mode | You can select running pattern in acceleration. | 0, 1 |
| 21 | | Deceleration mode | You can select running pattern in deceleration. | 0, 1 |
| 22 | | Sequential run maximum point number | You can set the maximum point number for positioning by use of sequential run signal. | 1 to 4 |
| 23 | | Coordinate system setting | 0: CCW rotation in + direction, 1: CW rotation in + direction | 0, 1 |
| 28 | | Position loop gain (the 1st gain) | You can determine the response of position control. | 0 to 100 |
| 29 | | Velocity loop gain (the 1st gain) | You can determine the response of velocity loop. | 0 to 10000 |
| 2A | | Velocity loop integration gain (the 1st gain) | You can determine the rigidity of velocity loop. | 0 to 10000 |
| 2b | | Velocity feed forward gain (the 1st gain) (%) | This is the function to forward (add) position command to speed command. | 0 to 100 |
| 2C | | Speed detection filter (the 1st gain) | You can set the time constant of low-pass filter of speed feedback. | 5 to 20 |
| 2d | | Velocity feed forward-timeconstant (Common to the 1st/2nd gain) (ms) | This is a filter in velocity feed forward section. | 0 to 500 |
| 2E | | Torque limit setting (the 1st gain) | Output torque of motor is limited. | 50 to 150 |
| 2F | | Torque filter-timeconstant (Common to the 1st/2nd gain) | You can set the time constant of primary delay filter of torque instruction. | 0 to 500 |
| 30 | | The 2nd position loop gain (the 2nd gain) | You can determine the response of position control. | 0 to 100 |
| 31 | | The 2nd velocity loop gain (the 2nd gain) | You can determine the response of velocity loop. | 0 to 10000 |
| 32 | | The 2nd velocity loop integration gain (the 2nd gain) | You can determine the rigidity of velocity loop. | 0 to 10000 |
| 33 | | The 2nd velocity feed forward gain (the 2nd gain) (%) | Set it at 0 in normal use. This is the function to forward (add) position command to speed command during on the 2nd gain. | 0 to 100 |
| 34 | | The 2nd speed detection filter (the 2nd gain) | Use the default setting normally.<br>You can set the time constant of low-pass filter in speed feedback. | 5 to 20 |
| 35 | | The 2nd torque limit setting (the 2nd gain) (%) | Output torque of the motor is limited. | 50 to 150 |
| 36 | | Gain switching mode selection | 0: Fixed at the 1st gain, 1: Fixed at the 2nd gain<br>2: Automatic switching (In running = the 2nd gain, In standstill = the 1st gain) | 0 to 2 |
| 37 | | Gain switching time (ms) | When the gain switching mode is set to automatic switching, after the output of instruction, the 2nd gain (in running) changes to the 1st gain (in standstill) when time setting has elapsed. | 0 to 10000 |



| Parameter No. | Parameter name | Explanation | Setting range |
|---|---|---|---|
| 38 | In-position range | In-position signal is turned on when position error (difference between command position and actual position) is below setting. | 0 to 16383 |
| 39 | Position error set-up | Abnormal detect when deviation value exceeds the set value × 8. | 0 to 16383 |
| 3A | Position error invalidation | 0: Effective, 1: Ineffective (Motor does not trip but keeps on operating.) | 0, 1 |
| 3E | Run-command selection | You can select the run-command. 0: I/O, 1: RS485 | 0, 1 |
| 40 | Homing mode | Select homing method. | 0 to 5 |
| 41 | Homing direction | You can set the detection direction of home. | 0, 1 |
| 42 | Homing speed (r/min) | You can set the speed in homing action. | 0 to 4000 |
| 43 | Homing limit | Sets the limit of the amount of movement during homing.<br>Homing error detect if travel distance has exceeded this setting. | 0 to 16383 |
| 44 | Homing acceleration/deceleration time (ms) | You can set time taken for reaching the homing speed. | 1 to 30000 |
| 45 | Bumping torque detection value (%) | You can limit the output torque of motor when returning to bumping home. | 50 to 150 |
| 46 | Bumping detection time (ms) | You can set the detection time of bumping toque in returning to bumping home. | 0 to 15000 |
| 47 | Home offset (pulse) | You can set the offset from home detection position. | –16384 to 16383 |
| 48 | Homing function | 0: Required, 1: Not required (Position when power is turned on is the home.)<br>2: When homing is not completed yet, homing operation is executed by positioning start signal. | 0 to 2 |
| 49 | Homing selection when motor is free | 0: When homing is unavailable after motor free state is reset (when trip occurs, after trip is reset), positioning operation is enabled.<br>1: When motor is free (trip occurs), homing is required again. | 0, 1 |
| 4A | Present position overflow permission | You can set operation when the present position counter of motor has overflowed (exceeded ±32767 rotations).<br>0: Prohibited (motor trip), 1: Permitted (no motor trip) | 0, 1 |
| 4b | Jog speed (r/min) | You can set the operation speed in jog operation. | 0 to 4000 |
| 4C | Jog acceleration time (ms) | You can set time taken for reaching jog speed. | 1 to 30000 |
| 4d | Jog deceleration time (ms) | You can set time taken from jog speed until stopping. | 1 to 30000 |
| 4E | Teaching speed (r/min) | You can set speed used in applying teaching function of Digital key pad. | 0 to 4000 |
| 50 | I1 function selection | You can assign functions to I1 through I4.<br>0: Forced trip, 1: Instantaneous stop, 2: Deceleration stop<br>3: Homing start, 4: Forward jog, 5: Reverse jog, 6: Point designation 1<br>7: Point designation 2, 8: Run start, 9: Sequential run start<br>10: Trip reset, 11: Home sensor, 12: Limit in + direction<br>13: Limit in – direction, 14: Direction switching, 15: Motor-free | 0 to 15 |
| 51 | I2 function selection | | |
| 52 | I3 function selection | | |
| 53 | I4 function selection | | |
| 54 | I1 Input logic selection | 0: Normal logic (Input is effective (ON) when connected to GND.)<br>1: Reverse rotation logic (Input is effective (ON) when OPEN (open))<br>Set the reverse rotation logic to the input desired to be operated on wiring break side such as forced trip (emergency stop input). | 0, 1 |
| 55 | I2 Input logic selection | | |
| 56 | I3 Input logic selection | | |
| 57 | I4 Input logic selection | | |
| 58 | Trip reset function enable | 0: Disable, 1: Enable (Operation start signal longer than 1 second enables execution of trip reset.) | 0, 1 |
| 59 | Deceleration time in instantaneous stop (ms) | Set the deceleration time in executing instantaneous stop. | 0 to 30000 |
| 5C | O1 function selection | You can assign functions to O1 and O2.<br>0: Trip output, 1: In-position, 2: In-motion signal (BUSY)<br>3: Homing completion, 4: Overload detection, 5: Torque under restriction | 0 to 5 |
| 5d | O2 function selection | | |
| 5E | O1 output polarity selection | 0: Normal logic (Output transistor ON at enabled, OFF at disabled)<br>1: Reversed logic (Output transistor OFF at enabled, ON at disabled)<br>When only trip output is normal logic, output transistor is off in tripping, and output transistor is on in no tripping. | 0, 1 |
| 5F | O2 output polarity selection | | |
| 60 | RS485 device number | Set the device number of amplifier in communication (Amplifier ID). | 128 to 159<br>(80h to 9Fh) |
| 61 | RS485 communication speed | Set the communication speed of RS485 communication. | 0 to 2 |
| 62 | RS485 communication standard | Set the communication standard of RS485 communication. | 0 to 11 |
| 63 | RS485 communication response time (ms) | Communication response time is the shortest time for setting transmission mode in RS485 bus for response after the amplifier has received communication data. | 10 to 100 |
| 64 | RS485 retry times of communication | Set the retry times of RS485 communication. | 0 to 9 |
| 65 | RS485 protocol timeout (seconds) | Protocol timeout is the time allowed from reception of a character code to reception of the next one in communication. | 1 to 255 |
| 6A | Trip history clear | When “(yes)” is set, trip history (Pr6b to 6F) is cleared. | 0(No), 1(Yes) |
| 6b | Trip history 1 | Display the latest trip. | — |
| 6C | Trip history 2 | Display the 2nd latest trip. | — |
| 6d | Trip history 3 | Display the 3rd latest trip. | — |
| 6E | Trip history 4 | Display the 4th latest trip. | — |
| 6F | Trip history 5 | Display the 5th latest trip. | — |
| 77 | Parameter copy function | This function is only available with use of the Digital key pad. | No/P.INIT/<br>P.LOAD/P.PROG |
| 7A | Monitor mode switching | You can choose monitor screen to be displayed first when the Digital key pad is connected. | 0 to 6 |
| 7b | Numerator of command pulse ratio | You can set the division multiplier ratio of travel distance. | 1 to 20000 |
| 7C | Denominator of command pulse ratio | | |
| 7F | For manufacturer use | It cannot be changed. | — |

# Example setting of motion pattern

## Indexing (feeding by fixed length)

• **When feeding by fixed length of travel**

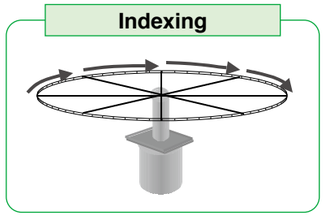


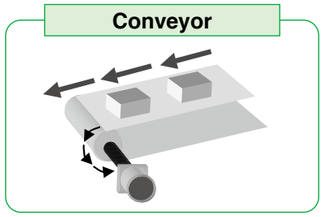


**<Example of setting>**

- Every time I1 is turned on, the motor runs for fixed travel distance.
- Homing operation is executed and the home is set when I1 is turned on just once after power-on. (It is also possible to set power-on position to the home.)

**[Signal function setting]**

| Terminal symbol | Terminal number | Terminal name | Description of function |
|---|---|---|---|
| I1 | 1 | Signal input 1 | Operates when "I1" and "GND" are shorted (Homing operation for the first time after power-on) |
| I2 | 2 | Signal input 2 | CW operation when "I2" and "GND" are shorted, CCW operation when they are opened (including homing operation mode) |
| I3 | 11 | Signal input 3 | Motor trips when "I3" and "GND" are open. |
| I4 | 4 | Signal input 4 | Home detected when "I4" and "GND" are shorted. |
| O1 | 6 | Signal output 1 | Trip output (Normally on, and off in tripping) |
| O2 | 12 | Signal output 2 | In motion signal (including homing operation) |

**[Operation timing chart]**

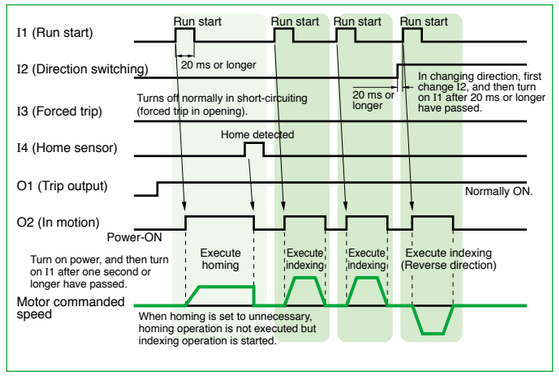


**[Parameter setting]** Indicates only the point changed from default setting. (Parameter marked with * is effective after power resetting.)

| Function | Parameter No. (Pr□□) | Name of parameter | Setting | Remarks |
|---|---|---|---|---|
| Selection of signal function | 50* | I1 function selection | 8 | Run start (used only for the 1st point) |
| | 51* | I2 function selection | 14 | Direction switching input |
| | 52* | I3 function selection | 0 | Forced trip input |
| | 53* | I4 function selection | 11 | Home sensor input |
| | 56* | I3 input logic selection | 1 | Changes the polarity of 3 to effective when open (forced trip in this case). |
| | 5C | 01 function selection | 0 | Trip output |
| | 5d | 02 function selection | 2 | In-motion signal |
| Homing function | 40 | Homing mode | 0, 1, 5 | Set homing in which to use home sensor. |
| | 41 | Homing direction | 0, 1 | Set any desired homing direction. |
| | 42 | Homing speed | 200 | Set any desired operation speed. |
| | 44 | Homing acceleration/deceleration time | 200 | Set any desired acceleration/deceleration time. |
| | 48* | Homing function | 2 | Set to 1 when setting power-on position to the home. |
| | 49 | Selecting homing when motor is free | 1 | Set to 1 (homing is required again when tripping occurs.) |
| | 4A | Present position overflow permission | 1 | Set to 1 (permits overflow). |
| The 1st point (indexing length) | 00 | The 1st target position (rotation number) | 10 | Set the travel distance by rotation number and pulse (one rotation per 288 pulses). When the setting does not represent proper mechanical reduction gear ratio, accumulated error occurs, which results in dislocation. |
| | 01 | The 1st target position (pulse) | 0 | |
| | 02 | The 1st coordinate setting | 0 | Set relative travel. |
| | 03 | The 1st setting speed | 2000 | Set any desired operation speed. |
| | 04, 05 | The 1st acceleration time/ The 1st deceleration time | 200 | Set any desired acceleration time and deceleration time. |
| | 06 | The 1st block setting | 0 | Set normal operation. |

**<Information>**

In this setting, I3 is set to forced trip when open. Connect an emergency stop switch or the like which is shorted but open at error to I3 terminal.
Please note that the motor will not run due to forced trip without such connection.



## Reciprocating

• **When executing reciprocating run between fixed positions**

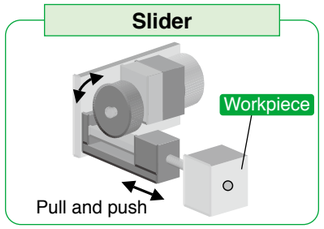


**<Example of setting>**

- Every time I1 is turned on, feed action → return action → feed action is repeated in turn.
- When power is on, homing operation is executed and home is set by I1.

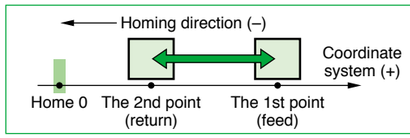


Coordinate system + direction depends on configuration of gear head and machine. When setting the rotation direction CCW of motor shaft to +, set Pr23 at "0", and when setting CW to +, set Pr23 at "1".

**[Signal function setting]**

| Terminal symbol | Terminal number | Terminal name | Description of function |
|---|---|---|---|
| I1 | 1 | Signal input 1 | Operates when "I1" and "GND" are shorted (Homing operation for the first time after power-on) |
| I2 | 2 | Signal input 2 | Home detected when "I2" and "GND" are shorted. |
| I3 | 11 | Signal input 3 | Operation stops when "I3" and "GND" are shorted. |
| I4 | 4 | Signal input 4 | Motor trips when "I4" and "GND" are open. |
| O1 | 6 | Signal output 1 | Trip output (Normally on, and off in tripping) |
| O2 | 12 | Signal output 2 | In motion signal (including homing operation) |

**[Operation timing chart]**

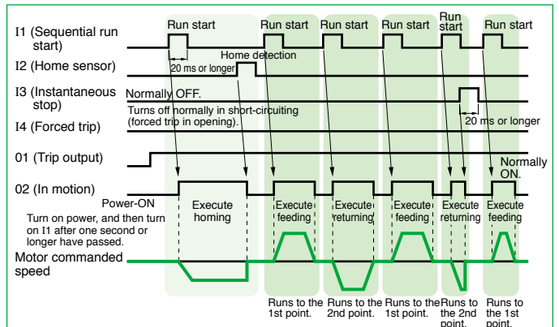


**[Parameter setting]** Indicates only the point changed from default setting. (Parameter marked with * is effective after power resetting.)

| Function | Parameter No. (Pr□□) | Name of parameter | Setting | Remarks |
|---|---|---|---|---|
| Selection of signal function | 50* | I1 function selection | 9 | Sequential run start |
| | 51* | I2 function selection | 11 | Home sensor input |
| | 52* | I3 function selection | 1 | Instantaneous stop input |
| | 53* | I4 function selection | 0 | Forced trip input |
| | 57* | I4 input logic selection | 1 | Changes the polarity of I4 to effective when open (forced trip in this case). |
| | 5C | 01 function selection | 0 | Trip output |
| | 5d | 02 function selection | 2 | In-motion signal |
| Homing function | 40 | Homing mode | 0 | Set homing in which to use home sensor. |
| | 41 | Homing direction | 1 | Set the homing direction normally to minus direction (return direction). |
| | 42 | Homing speed | 200 | Set any desired operation speed. |
| | 44 | Homing acceleration deceleration time | 200 | Set any desired acceleration/deceleration time. |
| | 48* | Homing function | 2 | Homing operation by initial I1 input when power is turned on. |
| | 49 | Selecting homing when motor is free | 0 | Homing is not required when tripping occurs. |
| | 4A | Present position overflow permission | 0 | Overflow is not permitted because absolute travel is set. |
| | 23* | Coordinate system setting | 0, 1 | Set so that homing is in minus direction. |
| The 1st point (feed position) | 00 | The 1st target position (rotation number) | 10 | Set the feed position coordinates. |
| | 01 | The 1st target position (pulse) | 0 | |
| | 02 | The 1st coordinate setting | 1 | Set absolute travel. |
| | 03 | The 1st setting speed | 2000 | Set any desired travel. |
| | 04, 05 | The 1st acceleration time/ The 1st deceleration time | 200 | Set any desired acceleration time and deceleration time. |
| | 06 | The 1st block setting | 0 | Set normal operation. |
| The 2nd point (return position) | 08 | The 2nd target position (rotation number) | 2 | Set the return position coordinate. (Set 0 when the position is the same as home.) |
| | 09 | The 2nd target position (pulse) | 0 | |
| | 0A | The 2nd coordinate setting | 1 | Set absolute travel. |
| | 0b | The 2nd setting speed | 2000 | Set any desired travel. |
| | 0C, 0d | The 2nd acceleration time/ The 2nd deceleration time | 200 | Set any desired acceleration time and deceleration time. |
| | 0E | The 2nd block setting | 0 | Set normal operation. |
| Others | 22 | Sequential run Maximum point number | 2 | Restricts the maximum point number in sequential operation. When this parameter is set to 2, whenever I1 is turned on, system operates in turn from the 1st point → the 2nd point → the 1st point .... |

# Example setting of motion pattern

## Automatic reciprocating

**• When executing fixed reciprocating sequence operation with single run start signal**

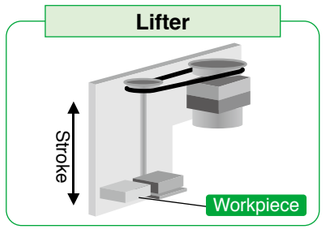


**<Example of setting>**

- When I1 is turned on, the unit moves to target position (feed position), waits for a specified time, and returns to original position (return position).
- When power is on, homing operation is executed and home is set by I1.

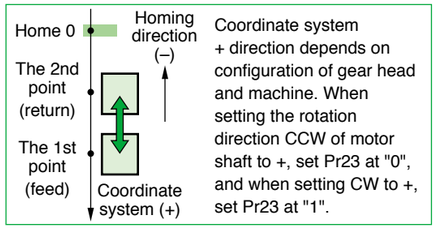


**[Signal function setting]**

| Terminal symbol | Terminal number | Terminal name | Description of function |
|---|---|---|---|
| I1 | 1 | Signal input 1 | Operates when "I1" and "GND" are shorted (Homing operation for the first time after power-on) |
| I2 | 2 | Signal input 2 | Home detected when "I2" and "GND" are shorted. |
| I3 | 11 | Signal input 3 | Operation stops when "I3" and "GND" are shorted. (Motor does not operate during short-circuit.) |
| I4 | 4 | Signal input 4 | Motor trips when "I4" and "GND" are open. |
| O1 | 6 | Signal output 1 | Trip output (Normally on, and off in tripping) |
| O2 | 12 | Signal output 2 | In motion signal (including homing operation) |

**[Operation timing chart]**

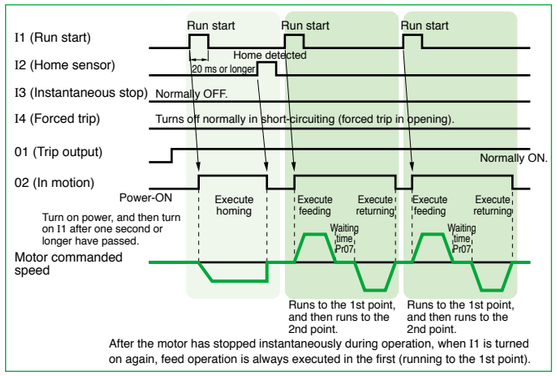


**[Parameter setting]** Indicates only the point changed from default setting. (Parameter marked with * is effective after power resetting.)

| Function | Parameter No. (Pr□□) | Name of parameter | Setting | Remarks |
|---|---|---|---|---|
| Selection of signal function | 50* | I1 function selection | 8 | Run start |
| | 51* | I2 function selection | 11 | Home sensor input |
| | 52* | I3 function selection | 1 | Instantaneous stop input |
| | 53* | I4 function selection | 0 | Forced trip input |
| | 57* | I4 input logic selection | 1 | Changes the polarity of I4 to effective when open (forced trip in this case). |
| | 5C | 01 function selection | 0 | Trip output |
| | 5d | 02 function selection | 2 | In-motion signal |
| Homing function | 40 | Homing mode | 0 | Set homing in which to use home sensor. |
| | 41 | Homing direction | 1 | Set the homing direction normally to minus direction (return direction). |
| | 42 | Homing speed | 200 | Set any desired operation speed. |
| | 44 | Homing acceleration/deceleration time | 200 | Set any desired acceleration/deceleration time. |
| | 48* | Homing function | 2 | Homing operation by initial I1 input when power is turned on. |
| | 49 | Selecting homing when motor is free | 0 | Homing is not required when tripping occurs. |
| | 4A | Present position overflow permission | 0 | Overflow is not permitted because absolute travel is set. |
| | 23* | Coordinate system setting | 0, 1 | Set so that homing is in minus direction. |
| The 1st point (feed position) | 00 | The 1st target position (rotation number) | 10 | Set the feed position coordinates. |
| | 01 | The 1st target position (pulse) | 0 | |
| | 02 | The 1st coordinate setting | 1 | Set absolute travel. |
| | 03 | The 1st setting speed | 2000 | Set any desired operation speed. |
| | 04, 05 | The 1st acceleration time/ The 1st deceleration time | 200 | Set any desired acceleration/deceleration time. |
| | 06 | The 1st block setting | 1 | Execute running to the 2nd point, after executing running to the 1st point. |
| | 07 | The 1st block timer setting | 500 | The 2nd point operation is started in 500 ms. |
| The 2nd point (return position) | 08 | The 2nd target position (rotation number) | 2 | Set the return position coordinate. (Set 0 when the position is the same as home.) |
| | 09 | The 2nd target position (pulse) | 0 | |
| | 0A | The 2nd coordinate setting | 1 | Set absolute travel. |
| | 0b | The 2nd setting speed | 2000 | Set any desired operation speed. |
| | 0C, 0d | The 2nd acceleration time/ The 2nd deceleration time | 200 | Set any desired acceleration/deceleration time. |
| | 0E | The 2nd block setting | 0 | Set normal operation. |
| | 0F | The 2nd block timer setting | 0 | Ineffective because 0E is 0. |



## Door opening/closing

**• When executing reciprocating operation between 2 points**

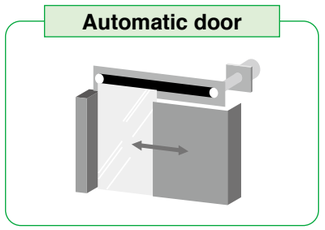


**<Example of setting>**

- When open/close is chosen and I1 is input, open/close operation is executed.
- When the door is stopped in any position on the way of action, opening or closing operation is enabled from such position. (It is the same when the door is moved by hand with motor disabled.)
- Use of bumping homing enables elimination of home sensor.
- Holding torque when motor is stopped can be changed.

- Coordinate system + direction depends on configuration of gear head and machine. When setting the rotation direction CCW of motor shaft to +, set Pr23 at "0", and when setting CW to +, set Pr23 at "1".
- When setting the Mechanical end offset value to –144, the Home is the point which has moved 144 pulses to the + direction seen from the Mechanical end.

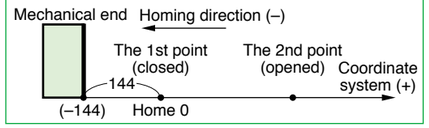


**[Signal function setting]**

| Terminal symbol | Terminal number | Terminal name | Description of function |
|---|---|---|---|
| I1 | 1 | Signal input 1 | Operates when "I1" and "GND" are shorted (Homing operation for the first time after power-on) |
| I2 | 2 | Signal input 2 | Opening (point 2) operation when "I2" and "GND" are shorted, and closing (point 1) operation when they are open. |
| I3 | 11 | Signal input 3 | Motor is free when "I3" and "GND" are open. (Servo lock released) |
| I4 | 4 | Signal input 4 | Operation is stopped when "I4" and "GND" are open. (Motor is not activated while they are open.) |
| O1 | 6 | Signal output 1 | Trip output (Normally on, and off in tripping) |
| O2 | 12 | Signal output 2 | In motion signal (including homing operation) |

**[Operation timing chart]**

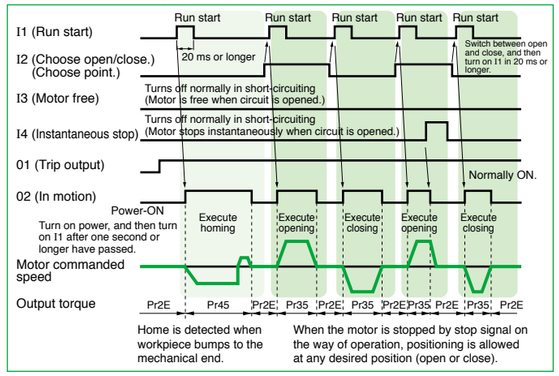


**[Parameter setting]** Indicates only the point changed from default setting. (Parameter marked with * is effective after power resetting.)

| Function | Parameter No. (Pr□□) | Name of parameter | Setting | Remarks |
|---|---|---|---|---|
| Selection of signal function | 50* | I1 function selection | 8 | Run start |
| | 51* | I2 function selection | 6 | Point designation 1 input (choosing the 1st/2nd point) |
| | 52* | I3 function selection | 15 | Motor-free input |
| | 53* | I4 function selection | 1 | Instantaneous stop input |
| | 56* | I3 input logic selection | 1 | Changes the polarity of I3 to effective when open (motor-free in this case). |
| | 57* | I4 input logic selection | 1 | Changes the polarity of I4 to effective when open (instantaneous stop in this case). |
| | 5C | 01 function selection | 0 | Trip output |
| | 5d | 02 function selection | 2 | In-motion signal |
| Homing function | 40 | Homing mode | 3 | Bumping homing |
| | 41 | Homing direction | 1 | Set the homing direction normally to minus direction (closing direction). |
| | 42 | Homing speed | 200 | Set any desired operation speed. |
| | 44 | Homing acceleration/deceleration time | 200 | Set any desired acceleration/deceleration time. |
| | 45 | Bumping torque detection value | 50 | Torque limit during bumping homing |
| | 46 | Bumping torque detection time | 100 | Home is detected when torque restriction continues for one second. |
| | 47 | Home offset | –144 | Set the distance from the home desired to be set to the mechanical end. |
| | 48* | Homing function | 2 | When power is turned on, homing operation is executed by initial I1 input. |
| | 49 | Homing selection when motor is free | 0 | Homing is not required when tripping occurs. |
| | 4A | Present position overflow permission | 0 | Overflow is not permitted because absolute travel is set. |
| | 23* | Coordinate system setting | 0, 1 | Set so that homing is in minus direction. |
| The 1st point (door closing position) | 00 | The 1st target position (rotation number) | 0 | Set the door closing position coordinate. (Coordinate is 0 when closing position is the same as home position.) |
| | 01 | The 1st target position (pulse) | 0 | |
| | 02 | The 1st coordinate setting | 1 | Set absolute travel. |
| | 03 | The 1st setting speed | 2000 | Set any desired operation speed. |
| | 04, 05 | The 1st acceleration time/ The 1st deceleration time | 200 | Set any desired acceleration time and deceleration time. |
| | 06 | The 1st block setting | 0 | Set normal operation. |
| The 2nd point (door opening position) | 08 | The 2nd target position (rotation number) | 40 | Set the door opening position coordinate. |
| | 09 | The 2nd target position (pulse) | 0 | |
| | 0A | The 2nd coordinate setting | 1 | Set absolute travel. |
| | 0b | The 2nd setting speed | 2000 | Set any desired operation speed. |
| | 0C, 0d | The 2nd acceleration time/ The 2nd deceleration time | 200 | Set any desired acceleration time and deceleration time. |
| | 0E | The 2nd block setting | 0 | Set normal operation. |

For automatically changing the retention torque (retention force) when door is stopped

| | | | | |
|---|---|---|---|---|
| Gain switching function | 2E | Torque limit setting | 100 | Sets the retention torque when door is stopped. The smaller the value is, the weaker the retention force becomes. |
| | 35 | The 2nd torque limit setting | 150 | Maximum output torque when door is operating. |
| | 36 | Gain switching mode selection | 2 | Set to 0 when executing no switching. |
| | 37 | Gain switching time | 100 | Torque is changed in 100 ms after completion of operation instruction. |

## Specification (For Common specification, see p. 47, p. 48)

| Size | Model No. / Amplifier and Motor: Brushless Amplifier (Model number in ( ) is shipped with power connection cable) | Motor | Rated output (W) | Input power supply for Amplifier: Voltage AC (V) | Allowed range (%) | Frequency (Hz) | Rated input current (A) | Rated torque (N·m) | Starting torque (N·m) | Rated speed (r/min) | Maximum rotation speed (r/min) |
|---|---|---|---|---|---|---|---|---|---|---|---|
| 80 mm sq. | MBEG5A1BCP (MBEG5A1BCPC) | MBMU5AZAB | 50 | Single phase 100 to 120 | ±10 | 50/60 | 1.5 | 0.16 | 0.24 | 3000 | 4000 |
| | MBEG5A5BCP (MBEG5A5BCPC) | | | Single phase /3-phase 200 to 240 | | | Single phase 0.7<br>3-phase 0.35 | | | | |

* Starting torque: Representative value

## Permissible torque at output shaft of gear head (N·m)

| Applicable Gear head | Reduction ratio | | 5 | 10 | 15 | 20 | 30 | 50 |
|---|---|---|---|---|---|---|---|---|
| MB8G□BV | motor rotation speed (r/min) | 3000 or less | 0.71 | 1.4 | 2.2 | 2.8 | 4.0 | 6.8 |
| | | 3000 to 4000 | 0.53 | 1.1 | 1.7 | 2.1 | 3.0 | 5.1 |
| | Rotational direction | | Same as motor rotational direction | | | | Reverse to motor rotational direction | |

## Permissible load inertia moment (×10⁻⁴ kg·m²)

| Reduction ratio | 5 | 10 | 15 | 20 | 30 | 50 |
|---|---|---|---|---|---|---|
| Applicable Gear head<br>MB8G□BV | 3.42 | 13.8 | 30.6 | 55.8 | 127 | 342 |

## Permissible shaft load

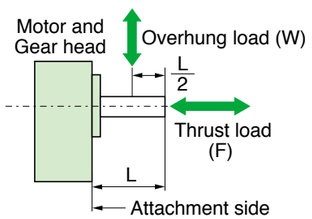


| | | Overhung load (W) | Thrust load (F) |
|---|---|---|---|
| Applicable Gear head | MB8G5BV | 245 N | 98 N |
| | MB8G10BV, 15BV, 20BV | 343 N | |
| | MB8G30BV, 50BV | 539 N | |

## Wiring diagram

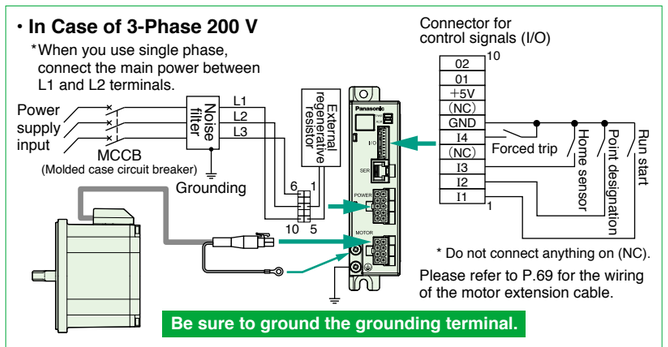


In wiring to power supply (outside of equipment) from MCCB, use an electric wire of 1.6 mm diameter (2.0 mm²) or more both for main circuit and grounding. Apply grounding class D (100 Ω or below) for grounding. Do not tighten the ground wires together, but connect them individually.

## Speed-torque characteristic

(Dotted line shows a characteristic curve when supply voltage drops by 10 %.)

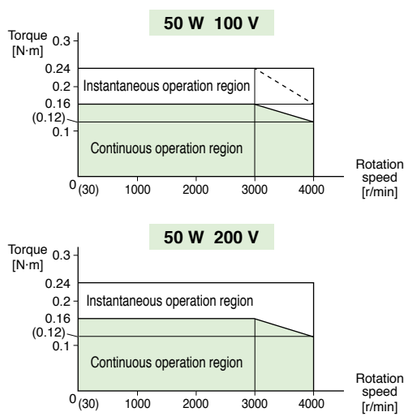


* Please refer to P.95 Support option.
* Before using, be sure to read "Instruction manual" to check precautions and correct procedure.



## Motor (dimensions)

Unit mm

mass 0.7 kg

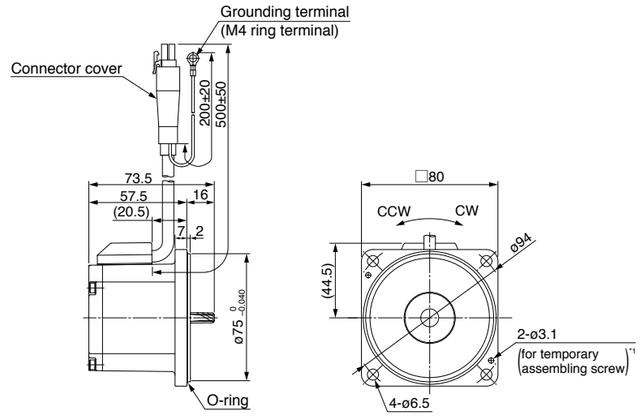


*1 Before installing the equipment, assemble the motor and gear head temporarily, which will ensure stable installation of the equipment.

## Gear head (dimensions)

Unit mm

### MB8G□BV

mass 0.8 kg (0.9 kg) *2

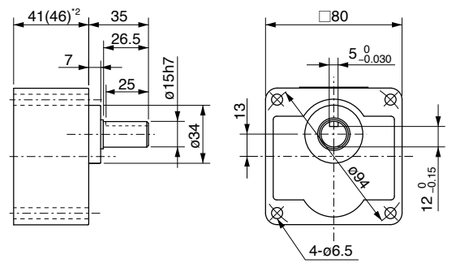


<Key and keyway [attachment]>

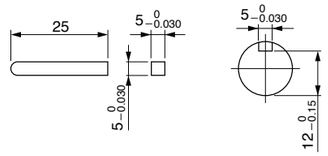


*2 Dimensions and mass with ( ) is the gearhead of gear ratio greater than 30.

## Brushless amplifier (dimensions)

Unit mm

mass 0.37 kg

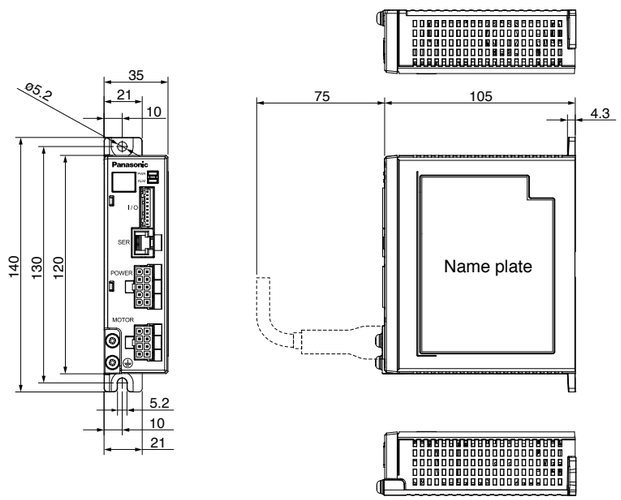


<Cautions> Dimensions are subject to change without notice. Contact us or a dealer for the latest information.

## Specification (For Common specification, see p. 47, p. 48)

| Size | Model No. / Amplifier and Motor: Brushless Amplifier (Model number in ( ) is shipped with power connection cable) | Motor | Rated output (W) | Input power supply for Amplifier: Voltage AC (V) | Allowed range (%) | Frequency (Hz) | Rated input current (A) | Rated torque (N·m) | Starting torque (N·m) | Rated speed (r/min) | Maximum rotation speed (r/min) |
|---|---|---|---|---|---|---|---|---|---|---|---|
| 90 mm sq. | MBEG9A1BCP (MBEG9A1BCPC) | MBMU9A1AB | 90 | Single phase 100 to 120 | ±10 | 50/60 | 2.2 | 0.29 | 0.43 | 3000 | 4000 |
| | MBEG9A5BCP (MBEG9A5BCPC) | MBMU9A2AB | | Single phase /3-phase 200 to 240 | | | Single phase 1.1<br>3-phase 0.5 | | | | |

* Starting torque: Representative value

## Permissible torque at output shaft of gear head (N·m)

| Applicable Gear head | Reduction ratio | | 5 | 10 | 15 | 20 | 30 | 50 |
|---|---|---|---|---|---|---|---|---|
| MB9G□BV | motor rotation speed (r/min) | 3000 or less | 1.2 | 2.5 | 3.6 | 4.9 | 7.0 | 11.6 |
| | | 3000 to 4000 | 0.90 | 1.9 | 2.7 | 3.7 | 5.3 | 8.7 |
| | Rotational direction | | Same as motor rotational direction | | | | Reverse to motor rotational direction | |

## Permissible load inertia moment (×10⁻⁴ kg·m²)

| Reduction ratio | 5 | 10 | 15 | 20 | 30 | 50 |
|---|---|---|---|---|---|---|
| Applicable Gear head<br>MB9G□BV | 16.4 | 67.6 | 142 | 257 | 589 | 1684 |

## Permissible shaft load

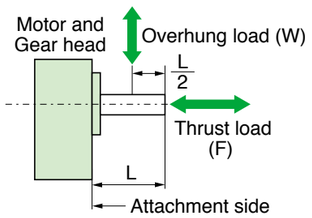


| | | Overhung load (W) | Thrust load (F) |
|---|---|---|---|
| Applicable Gear head | MB9G5BV | 294 N | 147 N |
| | MB9G10BV, 15BV, 20BV | 490 N | |
| | MB9G30BV, 50BV | 637 N | |

## Wiring diagram

• **In Case of 3-Phase 200 V**

*When you use single phase, connect the main power between L1 and L2 terminals.

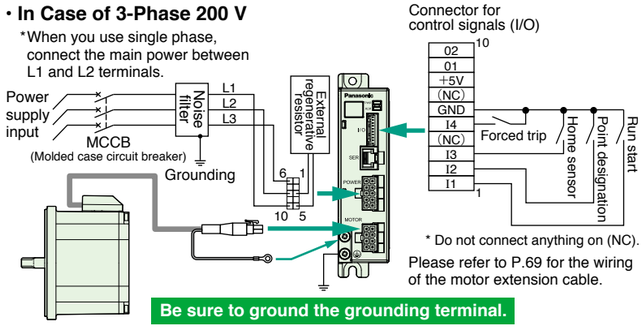


**Be sure to ground the grounding terminal.**

In wiring to power supply (outside of equipment) from MCCB, use an electric wire of 1.6 mm diameter (2.0 mm²) or more both for main circuit and grounding. Apply grounding class D (100 Ω or below) for grounding. Do not tighten the ground wires together, but connect them individually.

## Speed-torque characteristic

〈Dotted line shows a characteristic curve when supply voltage drops by 10 %.〉

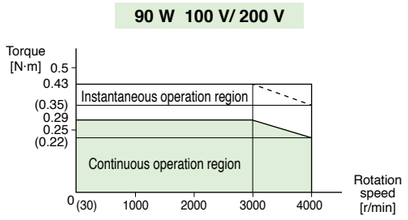


* Please refer to P.95 Support option.
* Before using, be sure to read "Instruction manual" to check precautions and correct procedure.



## Motor (dimensions)

Unit mm

mass 1.0 kg

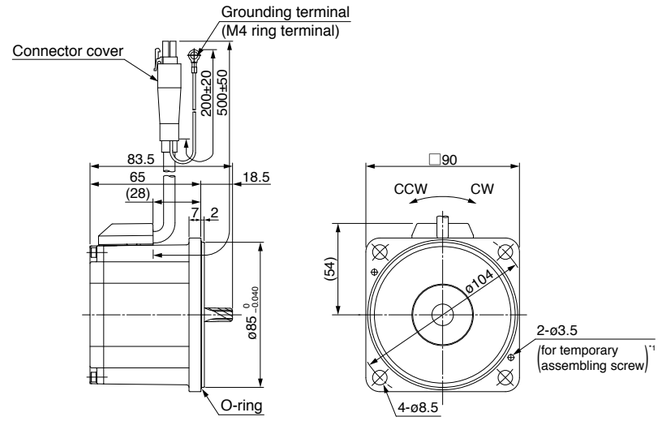


*1 Before installing the equipment, assemble the motor and gear head temporarily, which will ensure stable installation of the equipment.

## Gear head (dimensions)

Unit mm

### MB9G□BV

mass 1.1 kg (1.4 kg)*2

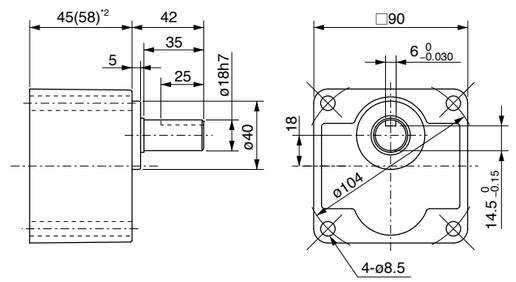


**<Key and keyway [attachment]>**

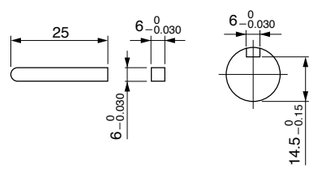


*2 Dimensions and mass with ( ) is the gearhead of gear ratio greater than 30.

## Brushless amplifier (dimensions)

Unit mm

mass 0.37 kg

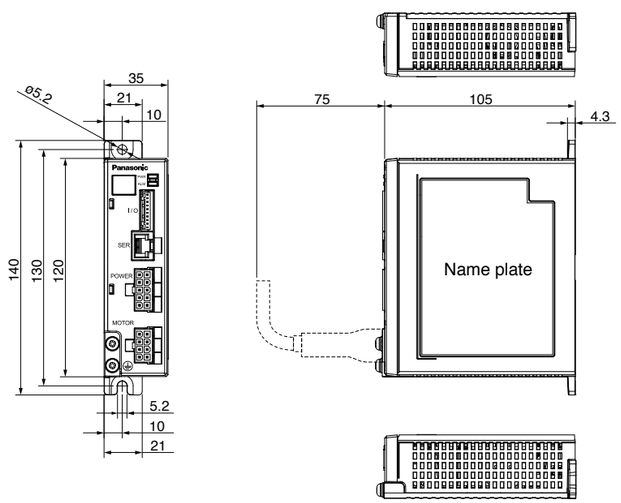


<Cautions> Dimensions are subject to change without notice. Contact us or a dealer for the latest information.

## Specification (For Common specification, see p. 47, p. 48)

| Size | Model No. / Amplifier and Motor: Brushless Amplifier (Model number in ( ) is shipped with power connection cable) | Motor | Rated output (W) | Input power supply for Amplifier: Voltage AC (V) | Allowed range (%) | Frequency (Hz) | Rated input current (A) | Rated torque (N·m) | Starting torque (N·m) | Rated speed (r/min) | Maximum rotation speed (r/min) |
|---|---|---|---|---|---|---|---|---|---|---|---|
| 90 mm sq. | MBEG1E1BCP (MBEG1E1BCPC) | MBMU1E1AB | 130 | Single phase 100 to 120 | ±10 | 50/60 | 2.8 | 0.41 | 0.62 | 3000 | 4000 |
| | MBEG1E5BCP (MBEG1E5BCPC) | MBMU1E2AB | | Single phase /3-phase 200 to 240 | | | Single phase 1.5<br>3-phase 0.7 | | | | |

* Starting torque: Representative value

## Permissible torque at output shaft of gear head (N·m)

| Applicable Gear head | Reduction ratio | | | 5 | 10 | 15 | 20 | 30 | 50 |
|---|---|---|---|---|---|---|---|---|---|
| MB9G□BV | motor rotation speed (r/min) | 3000 or less | | 1.9 | 3.7 | 5.6 | 7.4 | 10.7 | 17.7 |
| | | 3000 to 4000 | 100 V | 1.1 | 2.1 | 3.3 | 4.3 | 6.2 | 10.3 |
| | | | 200 V | 1.4 | 2.8 | 4.2 | 5.6 | 8.0 | 13.3 |
| | Rotational direction | | | Same as motor rotational direction | | | | Reverse to motor rotational direction | |

## Permissible load inertia moment (×10⁻⁴ kg·m²)

| Reduction ratio | 5 | 10 | 15 | 20 | 30 | 50 |
|---|---|---|---|---|---|---|
| Applicable Gear head | | | | | | |
| MB9G□BV | 16.4 | 67.6 | 142 | 257 | 589 | 1684 |

## Permissible shaft load

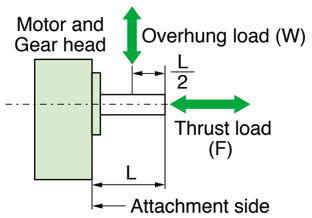


| | | Overhung load (W) | Thrust load (F) |
|---|---|---|---|
| Applicable Gear head | MB9G5BV | 294 N | 147 N |
| | MB9G10BV, 15BV, 20BV | 490 N | |
| | MB9G30BV, 50BV | 637 N | |

## Wiring diagram

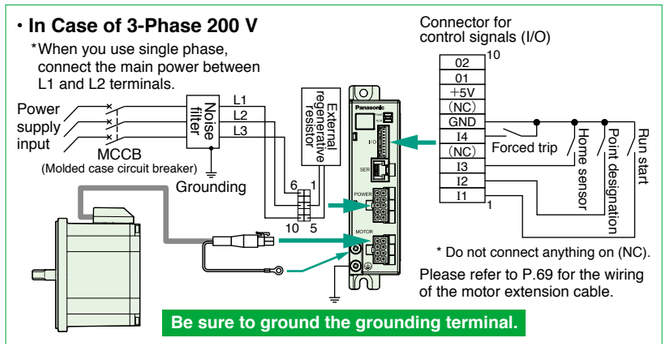


In wiring to power supply (outside of equipment) from MCCB, use an electric wire of 1.6 mm diameter (2.0 mm²) or more both for main circuit and grounding. Apply grounding class D (100 Ω or below) for grounding. Do not tighten the ground wires together, but connect them individually.

## Speed-torque characteristic

Dotted line shows a characteristic curve when supply voltage drops by 10 %.

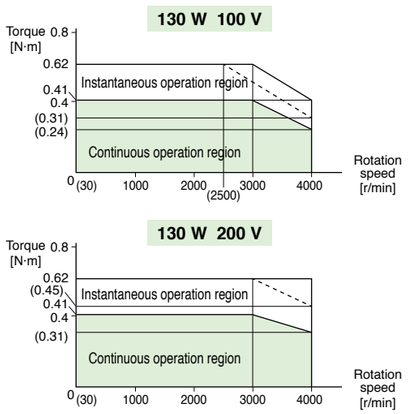


* Please refer to P.95 Support option.
* Before using, be sure to read "Instruction manual" to check precautions and correct procedure.



## Motor (dimensions)

Unit mm

mass 1.2 kg

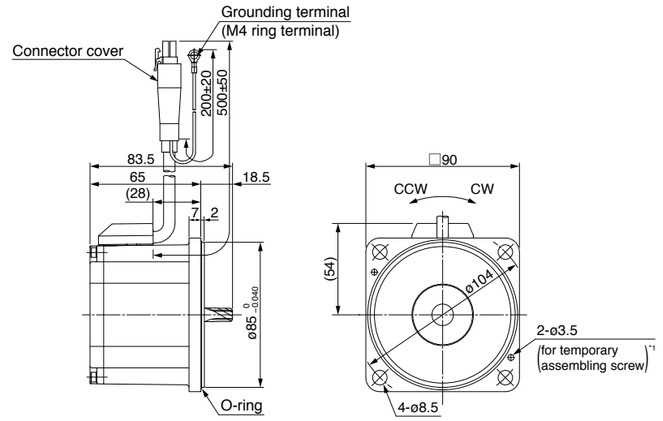


*1 Before installing the equipment, assemble the motor and gear head temporarily, which will ensure stable installation of the equipment.

## Gear head (dimensions)

Unit mm

### MB9G□BV

mass 1.1 kg (1.4 kg)*2

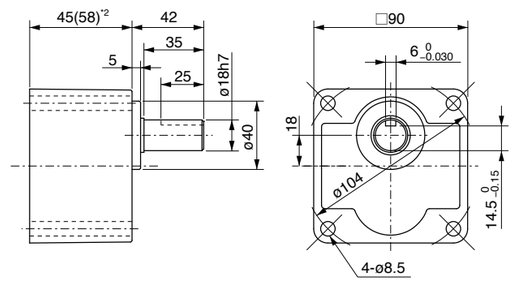


<Key and keyway [attachment]>

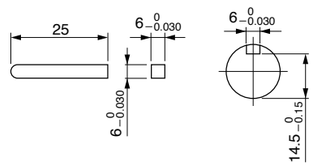


*2 Dimensions and mass with ( ) is the gearhead of gear ratio greater than 30.

## Brushless amplifier (dimensions)

Unit mm

mass 0.37 kg

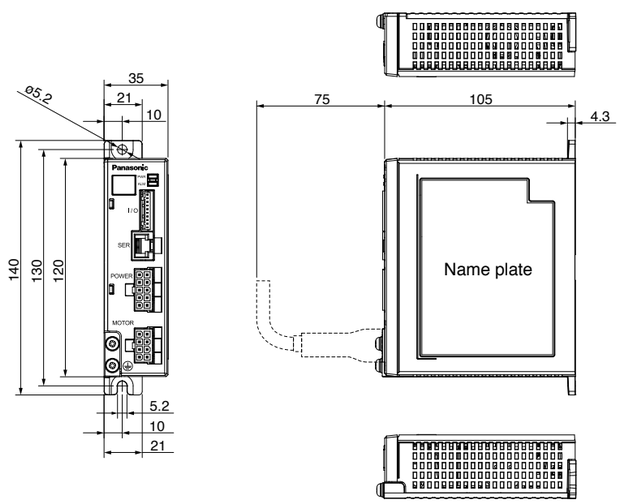


<Cautions> Dimensions are subject to change without notice. Contact us or a dealer for the latest information.

## Outline of gear head

### Reduction ratio

• Reduction ratio are 6 types 1/5 to 1/50.

### Gear type/size

MB8 : 50 W (Hinge not attached)
MB9 : 90 W, 130 W (Hinge not attached)

• Hinge not attached

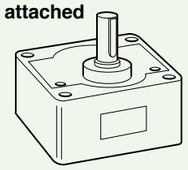

### Backlash

Less than 2° (design value)

■ **Type of gear head and reduction ratio**

| Gear type/size | Motor capacity | Reduction ratio | | | | | |
|---|---|---|---|---|---|---|---|
| | | 1/5 | 1/10 | 1/15 | 1/20 | 1/30 | 1/50 |
| MB8 | 50 W | ○ | ○ | ○ | ○ | ○ | ○ |
| MB9 | 90 W, 130 W | ○ | ○ | ○ | ○ | ○ | ○ |

### Check the Model number

**M B 8 G 30 BV**

- **Type** B: For GP series
- **Size** 8 : 80 mm sq. 9 : 90 mm sq.
- **Gear head**
- **Reduction ratio** (Example) 30: Reduction ratio of 1/30 5, 10, 15, 20, 30, 50
- **Bearing** BV : Ball bearing

* The motor and gear are sold separately.

### Calculation of torque at output shaft of gear head

■ **Standard gear head only**

$$N_G = \frac{N_M}{i}$$

$$T_G = T_M \times i \times \eta$$

$N_G$ : Speed of gear head 〔r/min〕
$N_M$ : Motor speed 〔r/min〕
$i$ : Reduction ratio of gear head
$T_G$ : Output torque of gear head 〔N·m〕
$T_M$ : Motor torque 〔N·m〕
$\eta$ : Gear head efficiency

### Maximum permissible torque

There is a limit to the strength of a gear due to its material and construction. The usable load torque determined based on this limit is called permissible torque. As can be seen from the above-mentioned formula, the load becomes larger when the reduction ratio is increased. If the gear head is used with the load exceeding the permissible torque, its life expectancy will be shortened significantly. Refer to the permissible torque for each model and use the gear head at an appropriate load.



### Nominal reduction ratio and actual reduction ratio

Actual reduction ratio of MB8, MB9 is the same as the nominal reduction ratio.
The numbers in the following table represents the denominator of actual reduction ratio.

| Gear type | | Nominal reduction ratio | | | | | |
|---|---|---|---|---|---|---|---|
| | | 1/5 | 1/10 | 1/15 | 1/20 | 1/30 | 1/50 |
| Actual reduction ratio | MB8G□BV | 5 | 10 | 15 | 20 | 30 | 50 |
| | MB9G□BV | 5 | 10 | 15 | 20 | 30 | 50 |

### Gear head efficiency

| Gear type | Reduction ratio | | | | | |
|---|---|---|---|---|---|---|
| | 1/5 | 1/10 | 1/15 | 1/20 | 1/30 | 1/50 |
| MB8G□BV | 90 % | | | | 86 % | |
| MB9G□BV | 90 % | | | | 86 % | |

### Gear head efficiency and ambient temperature

Calculate the actual gear head efficiency by multiplying the above-shown gear head efficiency at room temperature by the torque reduction ratio shown below.

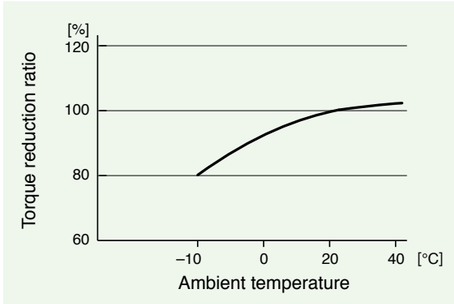


### Standard life

Standard life is 10000 hours for the motor equipped with gear head (MB8G and MB9G).
(Standard life of sealing performance of oil seal is 5000 hours.)
Standard life refers to design life for operation 8 hours per day (service factor: Sf = 1.0) at a normal temperature and humidity, under uniform load (permissible shaft torque of gear head and rated torque of motor).

* Standard life in the case of 3000 r/min to 4000 r/min rotation speed of the motor, please calculated by the following formula.

Standard life (hours) = 10000 (h) × 3000 (r/min) / rotation speed (r/min)

**<Information>**
Repeated forward/reverse operation with motor shaft rotation angle below 45 degrees causes fretting of bearing (partial wear due to bearing out of grease), and is not advisable. It does not apply if operation is available to rotate the motor shaft above 45 degrees at an appropriate interval more than once a day.)
Oscillation due to inappropriate setting of gain, also causes fretting.
Note that gear head shaft is also subject to this restriction.

### Service factor (Sf)

$$\text{Life expectancy} = \frac{\text{Standard life}}{\text{Service factor (Sf)}}$$

Service factor (Sf) varies with impact of load and operation time. The table below shows how the service factor value depends on load condition.

| Type of load | Typical load | Service factor | | |
|---|---|---|---|---|
| | | 5 hours/day | 8hours/day | 24hours/day |
| Constant | Belt conveyor, One-directional rotation | 1.0 | 1.0 | 1.5 |
| Light-impact | Start/Stop, Cam-drive | 1.2 | 1.5 | 2.0 |
| Medium-impact | Instant FWD/REV, Instant stop | 1.5 | 2.0 | 2.5 |
| Heavy-impact | Frequent medium-impact | 2.5 | 3.0 | 3.5 |

**<Important>**
The gear heads MB8G□BV and MB9G□BV are designed for use with GP series, and MX8G□B, MZ9G□B and MY9G□B are designed for use with GV series, respectively, and they are not compatible with gear heads of different series.

# Gear head GP series

## Model list of gear head

### Gear head

■ **Ball bearing**

| Size | Reduction ratio | Model No. |
|---|---|---|
| **80 mm sq.** (50 W) | 1/5, 1/10, 1/15 | **MB8G5BV、 MB8G10BV、MB8G15BV** |
| | 1/20, 1/30 | **MB8G20BV、MB8G30BV** |
| | 1/50 | **MB8G50BV** |
| **90 mm sq.** (90 W·130 W Common use) | 1/5 | **MB9G5BV** |
| | 1/10, 1/15 | **MB9G10BV、MB9G15BV** |
| | 1/20, 1/30, 1/50 | **MB9G20BV、MB9G30BV、MB9G50BV** |

* For the specifications for each item, refer to the page of the motor to which it can be applied.

### Gear head accessory

■ **Ball bearing**

| Size | Reduction ratio | Model No. | Accessory | | | | |
|---|---|---|---|---|---|---|---|
| | | | Screw (mm) | Flat washer | Hexagon nut | For temporary assembling screw hexagon socket head bolt | Key |
| **80 mm sq.** | 1/5 to 1/20 | **MB8G5BV** to **MB8G20BV** | **M6×65 hexagon socket head bolt : 4** | **for M6: 4** | **M6: 4** | **M2.6×12 : 2** | **5×5×25 one-end round : 1** |
| | 1/30, 1/50 | **MB8G30BV、MB8G50BV** | **M6×70 hexagon socket head bolt : 4** | **for M6: 4** | **M6: 4** | **M2.6×12 : 2** | **5×5×25 one-end round : 1** |
| **90 mm sq.** | 1/5 to 1/20 | **MB9G5BV** to **MB9G20BV** | **M8×75 hexagon socket head bolt : 4** | **for M8: 4** | **M8: 4** | **M3×12 : 2** | **6×6×25 one-end round : 1** |
| | 1/30, 1/50 | **MB9G30BV、MB9G50BV** | **M8×90 hexagon socket head bolt : 4** | **for M8: 4** | **M8: 4** | **M3×12 : 2** | **6×6×25 one-end round : 1** |

■ **O-ring**

Repair parts 10pcs / bag

| Size | Part No. |
|---|---|
| **80 mm sq.** | **DV0PN10008** |
| **90 mm sq.** | **DV0PN10009** |

**<Information>**

MB type gear head is provided with temporary assembling screw (two hexagon socket head bolt). Before installing the equipment, assemble the motor and gear head temporarily, which will ensure stable installation of the equipment. In installing to the equipment, be sure to use four "mounting screws" attached to the gear head for secure installation.

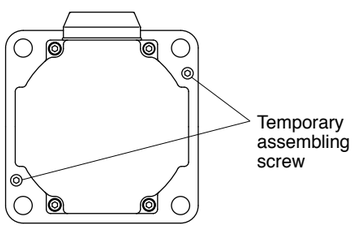


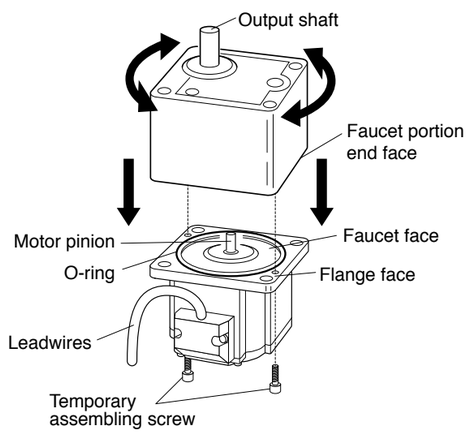


- Assemble with motor pinion faced up.
- Outward direction of motor leadwire can be aligned with any one of 4 sides of gear head with an output shaft at a different position.



# Options



**Contents**

# Option

## Noise filter/ Surge absorber/ MCCB

| Part name | Optional parts number (option) | Manufacturer's parts number | Qty. | Manufacturer |
|---|---|---|---|---|
| Noise filter (single phase 100 V, 200 V) | DV0P4170 | SUP-EK5-ER-6 | 1 | OKAYA ELECTRIC IND. CO., LTD. |
| Noise filter (3-phase) | DV0PM20042 | 3SUP-HU10-ER-6 | 1 | |
| Surge absorber (single phase 100 V, 200 V) | DV0P4190 | R·A·V-781BWZ-4 | 1 | |
| Surge absorber (3-phase) | DV0P1450 | R·A·V-781BXZ-4 | 1 | |
| Noise filter for control signals | DV0P1460 | ZCAT3035-1330 | 4 | TDK Corporation |

### Noise filter GV KV GP

• DV0P4170

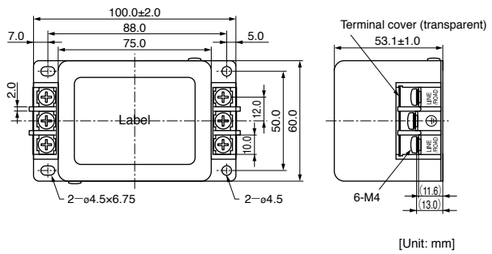


• DV0PM20042

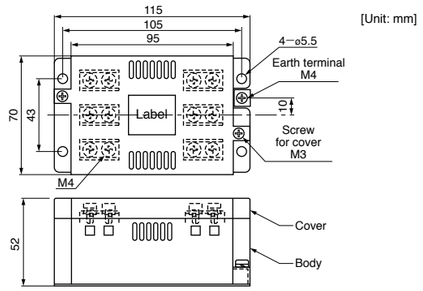


### Surge absorber GV KV GP

• DV0P4190

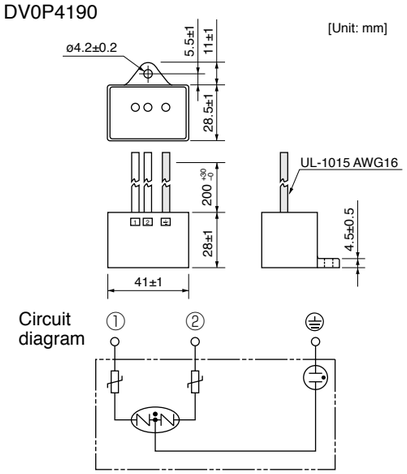


• DV0P1450

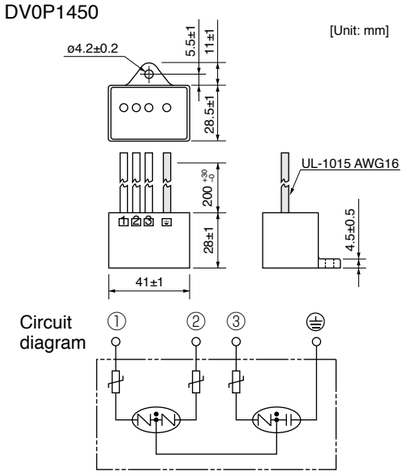


### Noise filter for control signals GV KV GP

• DV0P1460

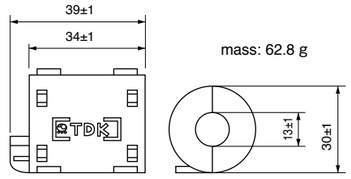


### Recommended circuit breaker (MCCB)

Made by Sensata Technologies Japan Limited: Type IELH-1-11-63-5A-M (single phase) Type IELH-1-111-63-5A-M (3-phase)
(Rated current 5A, cutoff characteristics DELAY63)
• Recommended cutoff characteristics: DELAY61-63



## Settings

### Console A GV KV

| Optional part number |
|---|
| DV0P3500 |

• Speed adjusting knob
• RUN/STOP switch
• Rotation direction selector switch

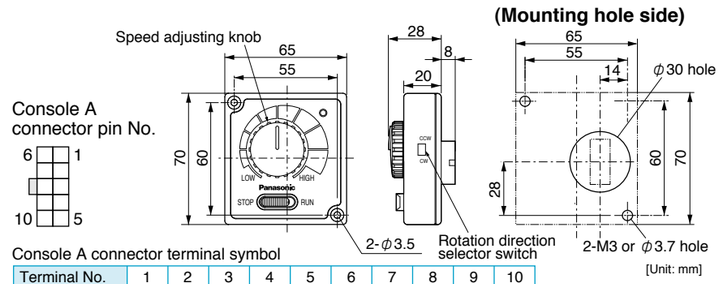


Console A connector terminal symbol

| Terminal No. | 1 | 2 | 3 | 4 | 5 | 6 | 7 | 8 | 9 | 10 |
|---|---|---|---|---|---|---|---|---|---|---|
| Terminal name | I1 | I2 | GND | FIN | +5V | — | — | — | — | — |

### Digital key pad GV KV GP

| Optional part number |
|---|
| DV0P3510 |

• RUN/STOP key
• Digital monitor [Rotation speed, Commanded speed, Internal DC voltage, Load factor, Torque, Trip history, (Display of the trip occurs, confirmation of the trip history) Overload warning (flashing)]
• Set/change parameters
• Storage of the parameters (read, write)

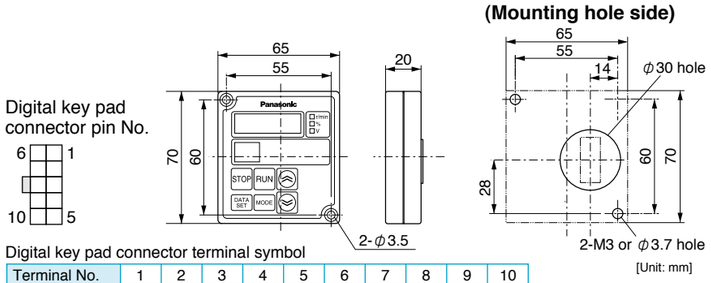


Digital key pad connector terminal symbol

| Terminal No. | 1 | 2 | 3 | 4 | 5 | 6 | 7 | 8 | 9 | 10 |
|---|---|---|---|---|---|---|---|---|---|---|
| Terminal name | — | — | GND | — | +5V | — | SCK | SIN | SOT | — |

## Cable

### Console A connection cable GV KV

| Optional parts number | Length (L) |
|---|---|
| DV0PM2006910 | 1 m |
| DV0PM2006930 | 3 m |
| DV0PM2006950 | 5 m |

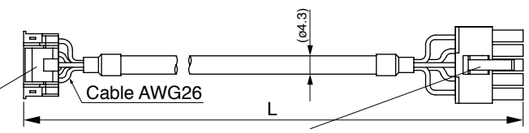


Amp.I/O side connector (J.S.T Mfg.Co.,Ltd.)
Connector : PAP-10V-S
Connector pin : SPHD-002T-P0.5

Console A side connector (Molex Inc.)
Connector : 39-01-2105 (5557-10R-210)
Connector pin : 39-00-0046 (5556T2)
or
39-00-0047 (5556T2L)

| Amp.I/O side connector pin No. | 1 | 2 | 3 | 4 | 5 | 6 | 7 | 8 | 9 | 10 |
|---|---|---|---|---|---|---|---|---|---|---|
| Lead color of a cable | Brown | Red | | | | Orange | Yellow | Green | | |
| Console A side connector pin No. | 1 | 2 | — | — | — | 3 | 4 | 5 | — | — |

### Digital key pad connection cable GV KV GP

| Optional parts number | Length (L) |
|---|---|
| DV0P38310 | 1 m |
| DV0P38330 | 3 m |
| DV0P38350 | 5 m |

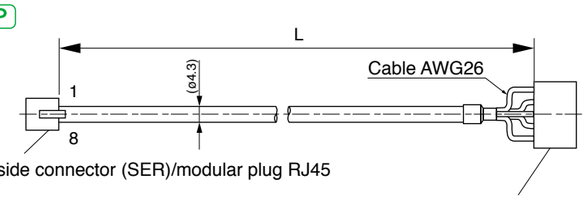


Amp.side connector (SER)/modular plug RJ45

Digital key pad side connector (Molex Inc.)
Connector : 39-01-2105 (5557-10R-210)
Connector pin : 39-00-0046 (5556T2)
or
39-00-0047 (5556T2L)

| Amp.side connector pin No.(SER) | 1 | 2 | 3 | 4 | 5 | 6 | 7 | 8 |
|---|---|---|---|---|---|---|---|---|
| Terminal name | — | +5V | SOT | SIN | — | — | GND | SCK |
| Digital key pad side connector pin No. | — | 5 | 9 | 8 | — | — | 3 | 7 |

# Option

## Motor extension cable GV GP

| Optional parts number | Length (L) |
|---|---|
| DV0PQ1000110 | 1 m |
| DV0PQ1000130 | 3 m |
| DV0PQ1000150 | 5 m |
| DV0PQ10001A1 | 10 m |

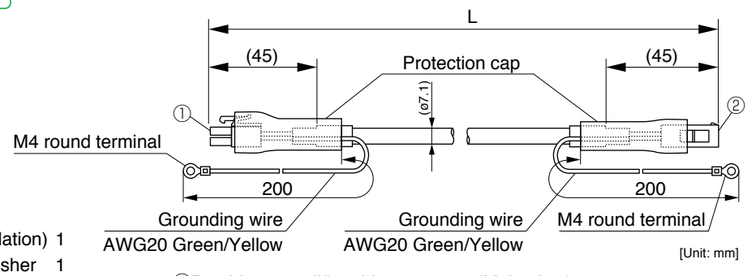


● **Accessories**

- Insulating cap (for grounding wire insulation) 1
- M4 × 6 pan head screw with spring washer 1
- M4 hex. nut 1

Insulating cap (for grounding wire insulation)

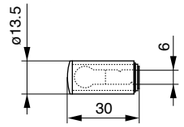


[Unit: mm]

①Brushless amplifier side connector (Molex Inc.)
Connector : 39-01-2085 (5557-08R-210)
Connector pin : 39-00-0039 (5556TL) 〔for AWG 20〕
39-00-0047 (5556T2L) 〔for AWG 26〕

②Motor side connector (Molex Inc.)
Connector : 39-01-2086 (5559-08P-210)
Connector pin : 39-00-0041 (5558TL) 〔for AWG 20〕
39-00-0049 (5558T2L) 〔 for AWG 26〕

■ When using motor extension cable, be sure to connect its grounding wire to the grounding wire of the motor, and connect the other end of grounding wire of the extension cable to the earth terminal of the brushless amplifier.
For connecting grounding wire of motor and motor extension cable, use M4 screw and insulating cap supplied as accessories.

**<Connector wiring>**

• Brushless amplifier side

| Pin No. | Signal | Wire color | Wire size |
|---|---|---|---|
| 1 | U | Red | AWG20 |
| 2 | V | White | AWG20 |
| 3 | W | Black | AWG20 |
| 4 | Vcc | White | AWG26 |
| 5 | CS1 | Red | AWG26 |
| 6 | CS2 | Blue | AWG26 |
| 7 | CS3 | Yellow | AWG26 |
| 8 | 0V | Black | AWG26 |
| M4 round terminal | E | Green/Yellow | AWG20 |

• Motor side

| Pin No. |
|---|
| 1 |
| 2 |
| 3 |
| 4 |
| 5 |
| 6 |
| 7 |
| 8 |
| M4 round terminal |

## Motor extension cable KV

| Optional parts number | Length (L) |
|---|---|
| DV0PQ1000310 | 1 m |
| DV0PQ1000330 | 3 m |
| DV0PQ1000350 | 5 m |
| DV0PQ10003A1 | 10 m |

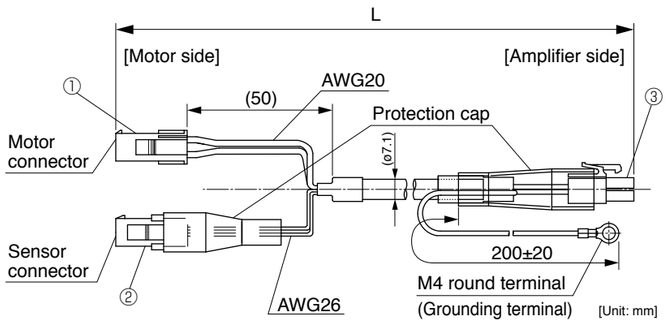


**<Wiring of motor side connector>**

• Motor connector

| Pin No. | Signal | Wire color |
|---|---|---|
| 1 | U | Red |
| 2 | V | White |
| 3 | W | Black |
| 4 | E | Green/Yellow |

• Sensor connector

| Pin No. | Signal | Wire color |
|---|---|---|
| 1 | CS1 | Red |
| 2 | CS2 | Blue |
| 3 | CS3 | Yellow |
| 4 | Vcc | White |
| 5 | 0V | Black |
| 6 | NC | — |

Do not connect anything on (NC).

①Motor side motor connector (Tyco Electronics.)
Connector : 172159-1
Connector pin : 170366-1 〔for AWG 20〕

②Motor side sensor connector (Molex Inc.)
Connector : 39-01-2066 (5559-06P-210)
Connector pin : 39-00-0049 (5558T2L) 〔for AWG 26〕

③Brushless amplifier side connector (Molex Inc.)
Connector : 39-01-2085 (5557-08R-210)
Connector pin : 39-00-0039 (5556TL) 〔for AWG 20〕
39-00-0047 (5556T2L) 〔for AWG 26〕

**<Connector wiring of amplifier side>**

| Pin No. | Signal | Wire color | Wire size |
|---|---|---|---|
| 1 | U | Red | AWG20 |
| 2 | V | White | AWG20 |
| 3 | W | Black | AWG20 |
| 4 | Vcc | White | AWG26 |
| 5 | CS1 | Red | AWG26 |
| 6 | CS2 | Blue | AWG26 |
| 7 | CS3 | Yellow | AWG26 |
| 8 | 0V | Black | AWG26 |
| M4 round terminal | E | Green/Yellow | AWG20 |



## PC connection cable (10-pin D-sub connector pin 1.5 m) GV KV GP

| Optional parts number | Length (L) |
|---|---|
| DV0P4140 | 1.5 m |

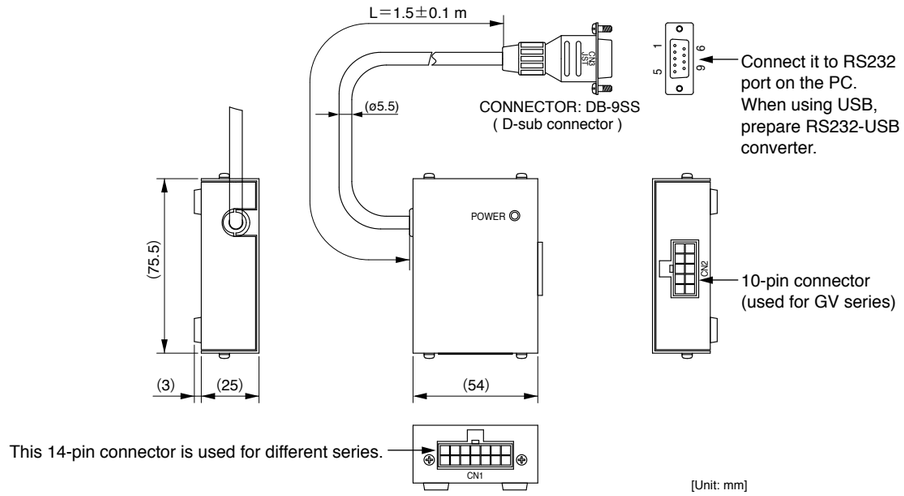


## Communication software GV KV GP

| Model No. | |
|---|---|
| PANATERM for BL | Can be downloaded from our web site, free of charge.<br>http://industrial.panasonic.com/ww/products/motors-compressors/fa-motors |

## Connector Kit/ Cable/ External speed setter

### Power supply connector kit GV KV (50 W, 100 W) GP

| Optional part number | Name | Manufacturer's parts No. | Qty. | Manufacturer | Note |
|---|---|---|---|---|---|
| DV0P2870 | Connector | 39-01-2105 (5557-10R-210) | 1 | Molex Inc | Fits to power supply connector (POWER) |
| | Connector pin | 39-00-0060 (5556PBTL) | 6 | | |

• 39-01-2105 (5557-10R-210)

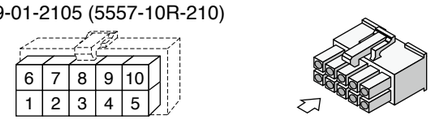


### Control signal cable (Cable with an I/O connector) GV KV GP

| Optional parts number | Length (L) |
|---|---|
| DV0PM20076 | 2 m |

* Do not connect anything to the pin no.4 and pin no.7 in case of use the GP series.

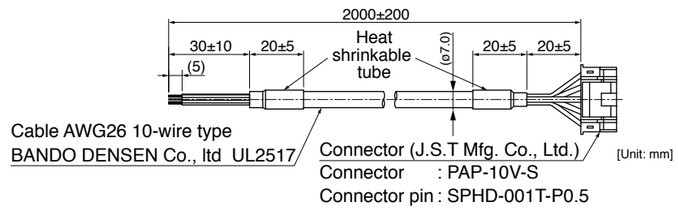


**<For your reference>**
For tools such as crimp tools necessary to assemble the cable, access the connector manufacturer's web site or consult the manufacturer: refer to p. 75 "List of peripheral equipment manufacturers".

# Option

## I/O connector kit GV KV GP

| Optional part number | Name | Manufacturer's parts No. | Qty. | Manufacturer | Note |
|---|---|---|---|---|---|
| DV0PM20070 | Connector | PAP-10V-S | 1 | J.S.T Mfg.Co.,Ltd. | Fits to I/O connector |
| | Connector pin | SPHD-002T-P0.5 | 10 | | |

• PAP-10V-S


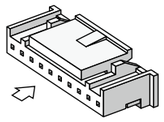

## External speed setter GV KV

| Optional part number |
|---|
| DV0PM20078 |


5 kΩ B characteristic 1/4 W

[Unit: mm]

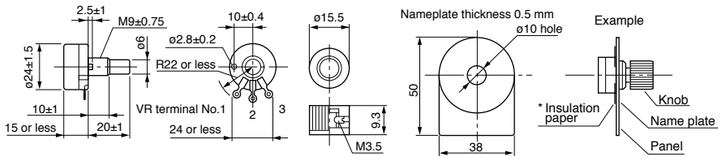


* Insert the insulation paper to positively isolate the terminals and chassis.

## Panel connector kit (Fits to Console A) GV KV

| Optional part number | Name | Manufacturer's parts No. | Qty. | Manufacturer | Note |
|---|---|---|---|---|---|
| DV0P3610 | Connector | 39-01-2105 (5557-10R-210) | 1 | Molex Inc | Fits to Console A |
| | Connector pin | 39-00-0047 (5556T2L) | 10 | | |

• 39-01-2105 (5557-10R-210)

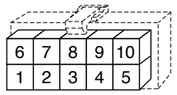


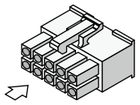

## External regenerative resistor GV KV GP

| Optional parts number | Manufacturer's parts number | Specifications | | | Note (Input Power of drive) | Manufacturer |
|---|---|---|---|---|---|---|
| | | Resistance | Rated power | Activation temperature of built-in fuse | | |
| DV0P2890 | 45M03 | 50 Ω | 10 W | $137^{+3}_{-2}$ °C | 100 V | Iwaki Musen Kenkyusho Co., Ltd |
| DV0PM20068 | 45M03 | 200 Ω | 10 W | $137^{+3}_{-2}$ °C | 200 V | |

• DV0P2890, DV0PM20068

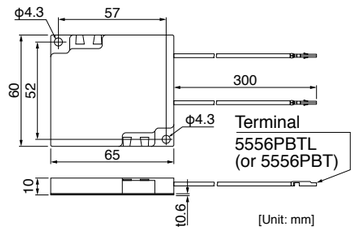


GV GP

* Connect terminals to pins No. 3 and No. 5 of the power supply connector, respectively.

KV

* When using amplifiers of 50 W or 100 W. Connect terminals to pins No. 3 and No. 5 of the power supply connector, respectively.
When using amplifiers of 200 W, 400 W or 750 W. Connect terminals to pins No.4 (P) and No.5 (B1) of the power supply terminals block with using pin terminals.

### <Caution of when using external regeneration resistor>

**Since it becomes high temperature, external regeneration resistor must be installed according to the contents shown below.**

- **Attach to incombustibles, such as metal.**
- **Install in the place which cannot touch directly by covering with incombustibles etc.**
- **Do not install near the combustibles.**

**Although the thermal cutoff is built in external regeneration resistor, the skin temperature of regeneration resistor may become high exceeding the operating temperature of thermal cutoff by the time the thermal cutoff operates in amplifier failure.**
**The thermal cutoff is for preventing ignition of the regeneration resistor in amplifier failure, and is not for controlling the skin temperature of resistor.**

**<Remarks>**
**Thermal fuse is installed for safety.**
**The thermal fuse may blow due to heat dissipating condition, working temperature, supply voltage or load fluctuation.**
**Make it sure that the surface temperature of the resistor may not exceed 100 °C at the worst running conditions with the machine, which brings large regeneration (such case as high supply voltage, load inertia is large or deceleration time is short) Please carry out air cooling if needed.**



## DIN rail mounting unit GV KV (50 W, 100 W) GP

| Optional part number |
|---|
| DV0P3811 |

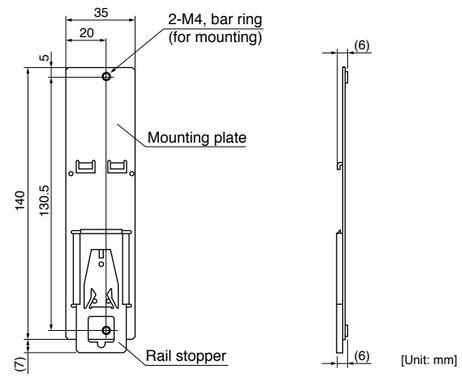


### • How to Install

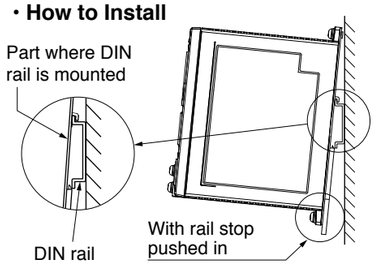


Hook the upper side of DIN rail mounting part on the DIN rail.

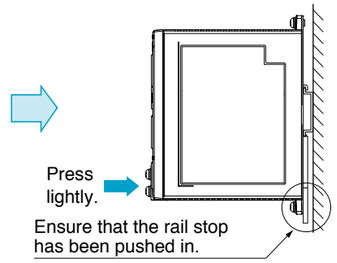


Press lightly the lower part of the main body of amplifier.

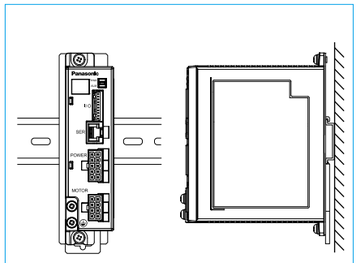

Amplifier mounted to DIN rail

### • Removing from DIN Rail

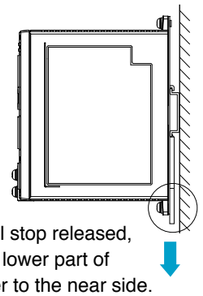

With the rail stop released, pull out the lower part of the amplifier to the near side.

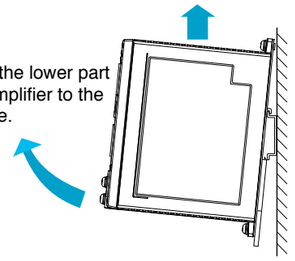

Pull out the lower part of the amplifier to the near side.

By lifting the amplifier, you can remove it from the DIN rail.

**<Notes>**
2 mounting screws (M4 X L8, Pan head) are attached.
Rail stopper can be extended to max. 10 mm.

**<Cautions>**
Please read carefully operation manual before using this product.
In addition, please do not apply excessive stress to the product.

# Option

## Reactor GV KV GP

Fig.1

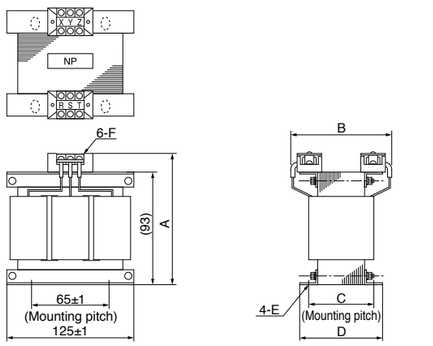


C: Center-to-center distance on outer circular arc

• **Wiring of the reactor**
<3-Phase 200 V>

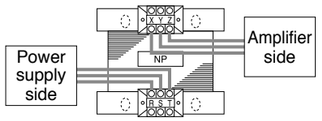


Fig.2

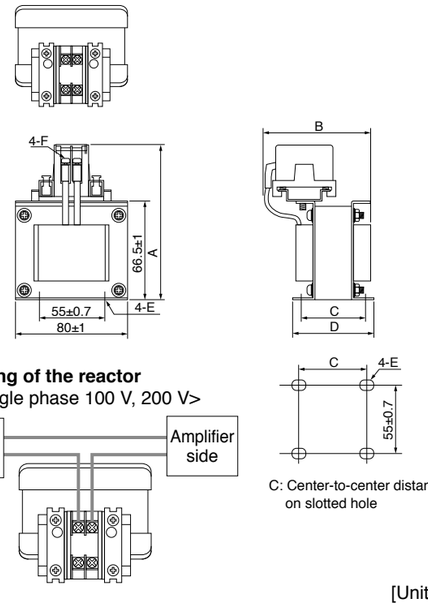


C: Center-to-center distance on slotted hole

• **Wiring of the reactor**
<Single phase 100 V, 200 V>

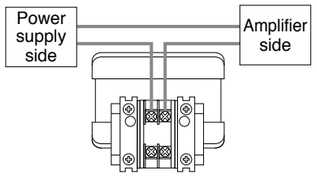


[Unit: mm]

| | Optional parts number | A (Max) | B (Max) | C | D | E | F | Inductance (mH) | Rated current (A) |
|---|---|---|---|---|---|---|---|---|---|
| Fig.1 | **DV0P220** | 136 | 155 | 70+3/–0 | 85±2 | 4-7ϕ×12 | M4 | 6.81 | 3 |
| Fig.2 | **DV0P227** | 110 | 90 | 41±2 | 55±2 | 4-5ϕ×10 | M4 | 4.02 | 5 |
| | **DV0P228** | 110 | 95 | 46±2 | 60±2 | 4-5ϕ×10 | M4 | 2 | 8 |

* For applicability of reactor, refer to the corresponding table on p. 95.

### Harmonic restraint

Harmonic restraint measures are not common to all countries. Therefore, prepare the measures that meet the requirements of the destination country.
With products for Japan, on September, 1994, “Guidelines for harmonic restraint on heavy consumers who receive power through high voltage system or extra high voltage system” and “Guidelines for harmonic restraint on household electrical appliances and general-purpose articles” established by the Agency for Natural Resources and Energy of the Ministry of Economy, Trade and Industry (the ex-Ministry of International Trade and Industry). According to those guidelines, the Japan Electrical Manufacturers’ Association (JEMA) have prepared technical documents (procedure to execute harmonic restraint:
JEM-TR 198, JEM-TR 199 and JEM-TR 201) and have been requesting the users to understand the restraint and to cooperate with us. On January, 2004, it has been decided to exclude the general-purpose inverter and servo driver from the “Guidelines for harmonic restraint on household electrical appliances and general-purpose articles”. After that, the “Guidelines for harmonic restraint on household electrical appliances and general-purpose articles” was abolished on September 6, 2004.
We are pleased to inform you that the procedure to execute the harmonic restraint on general-purpose inverter and servo driver was modified as follows.

1. All types of the general-purpose inverters and servo drivers used by specific users are under the control of the “Guidelines for harmonic restraint on heavy consumers who receive power through high voltage system or extra high voltage sytem”. The users who are required to apply the guidelines must calculate the equivalent capacity and harmonic current according to the guidelines and must take appropriate countermeasures if the harmonic current exceeds a limit value specified in a contract demand. (Refer to JEM-TR 210 and JEM-TR 225.)
2. The “Guidelines for harmonic restraint on household electrical appliances and general-purpose articles” was abolished on September 6, 2004. However, based on conventional guidelines, JEMA applies the technical documents JEM-TR 226 and JEM-TR 227 to any users who do not fit into the “Guidelines for harmonic restraint on heavy consumers who receive power through high voltage system or extra high voltage system” from a perspective on enlightenment on general harmonic restraint. The purpose of these guidelines is the execution of harmonic restraint at every device by a user as usual to the utmost extent.

**<Remarks>**
When using a reactor, be sure to install one reactor to one brushless amplifier.



## O-ring GV GP

Repair parts 10pcs / bag

| Optional parts number | Size |
|---|---|
| **DV0PN10008** | **80 mm sq.** |
| **DV0PN10009** | **90 mm sq.** |

• Assemble with motor pinion faced up.
• Outward direction of motor leadwire can be aligned with any one of 4 sides of gear head with an output shaft at a different position.

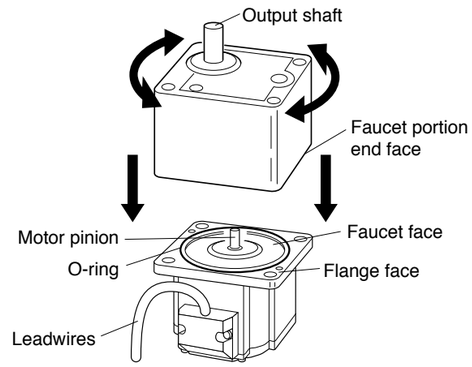


## Power cable (single phase 100 V, 200 V) with connector GV KV (50 W, 100 W) GP

When the following part number is specified in the order, the power cable is delivered with the product.

| | | 50 W | 90 W | 100 W | 130 W |
|---|---|---|---|---|---|
| GV series | 100 V | **MBEG5A1BCVC** | **MBEG9A1BCVC** | — | **MBEG1E1BCVC** |
| | 200 V | **MBEG5A5BCVC** | **MBEG9A5BCVC** | | **MBEG1E5BCVC** |
| KV series | 100 V | **MBEK5A1BCVC** | — | **MBEK011BCVC** | — |
| | 200 V | **MBEK5A5BCVC** | | **MBEK015BCVC** | |
| GP series | 100 V | **MBEG5A1BCPC** | **MBEG9A1BCPC** | — | **MBEG1E1BCPC** |
| | 200 V | **MBEG5A5BCPC** | **MBEG9A5BCPC** | | **MBEG1E5BCPC** |

• When supplying 3-phase power source to a 200 V brushless amplifier, use the supplied power cable and connect 2 conductors to L1 and L2.
• When supplying 3-phase power, use a power connection kit and connect three conductors to L1, L2 and L3.
• For location of L1, L2 and L3, refer to the wiring diagram on pages 17, 19 and 21 (GV series), pages 35 and 37 (KV series), pages 57, 59 and 61 (GP series).

### ■ Cable specification

[Unit: mm]

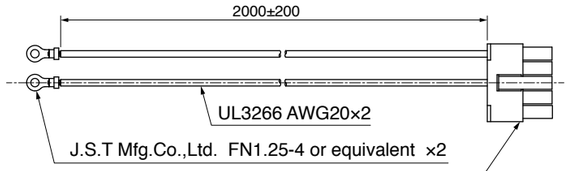


Connector for power supply connection (Molex Inc.)
Connector : 39-01-2105 (5557-10R-210)
Connector pin : 39-00-0038 (5556T) or 39-00-0039 (5556T2)

• Grounding wire

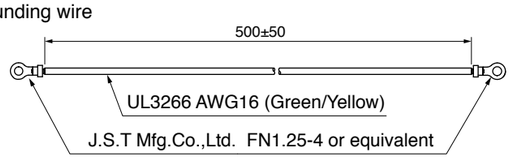

# List of peripheral equipments

| Manufacturer | Tel No. / Home page | Peripheral components |
|---|---|---|
| TDK Corporation | +81-3-5201-7229<br>http://www.tdk.co.jp/ | Noise filter for signal lines |
| Okaya Electric Industries Co. Ltd. | +81-3-4544-7040<br>http://www.okayatec.co.jp/ | Surge absorber<br>Noise filter |
| Sensata Technologies Japan Limited | +81-49-283-7575<br>www.sensata.com/japan | Circuit breaker (MCCB) |
| Japan Molex Inc. | +81-462-65-2313<br>http://www.molex.co.jp | Connector |
| J.S.T. Mfg. Co., Ltd. | +81-45-543-1271<br>http://www.jst-mfg.com/index_i.html | |
| Iwaki Musen Kenkyusho Co., Ltd. | +81-44-833-4311<br>http://www.iwakimusen.co.jp/ | Regenerative resistor |
| KK-CORP.CO.JP | +81-184-53-2307<br>http://www.kk-corp.co.jp/ | Reactor core |
| NICHIFU Co.,ltd. | +81-6-6911-1455<br>http://www.nichifu.co.jp/ | Pin terminal |

* This list is for reference only and subject to change without notice.

MEMO



# Information

Information

Contents

# Guide to the international system of units (SI)

## Organization of the system of units

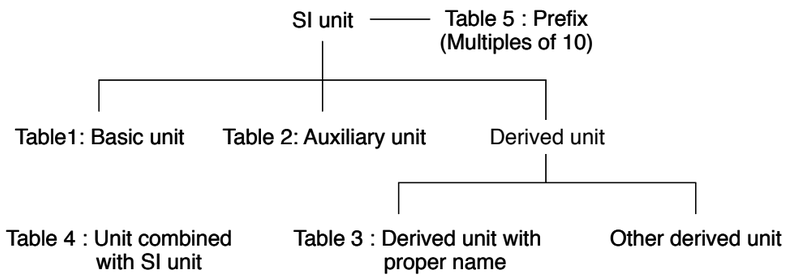


### Table1: Basic unit

| Quantity | Name of unit | Symbol of unit |
|---|---|---|
| Length | meter | m |
| Weight | kilogram | kg |
| Time | second | s |
| Current | ampere | A |
| Thermodynamic temperature | kelvin | K |
| Amount of substance | mol | mol |
| Luminous intensity | candela | cd |

### Table 2: Auxiliary unit

| Quantity | Name of unit | Symbol of unit |
|---|---|---|
| Plane angle | radian | rad |
| Solid angle | steradian | sr |

### Table 3: Major derived unit with proper name

| Quantity | Name | Symbol of unit | Derivation from basic unit, auxiliary unit or other derived unit |
|---|---|---|---|
| Frequency | hertz | Hz | 1 Hz = 1 $s^{-1}$ |
| Force | newton | N | 1 N = 1 kg·m/$s^2$ |
| Pressure, Stress | pascal | Pa | 1 Pa = 1 N/$m^2$ |
| Energy, Work, Amount of heat | joule | J | 1 J = 1 N·m |
| Amount of work, Work efficiency, Power, Electric power | watt | W | 1 W = 1 J/s |
| Electric charge, Amount of electricity | coulomb | C | 1 C = 1 A·s |
| Electric potential, Potential difference, Voltage, Electromotive force | volt | V | 1 V = 1 J/C |
| Electrostatic capacity, Capacitance | farad | F | 1 F = 1 C/V |
| Electric resistance | ohm | Ω | 1 Ω = 1 V/A |
| Electric conductance | siemens | S | 1 S = 1 $Ω^{-1}$ |
| Magnetic flux | weber | Wb | 1 Wb = 1 V·s |
| Magnetic flux density, Magnetic induction | tesla | T | 1 T = 1 Wb/$m^2$ |
| Inductance | henry | H | 1 H = 1 Wb/A |
| Degree centigrade (Celsius) | degree centigrade (Celsius)/ degree | ˚C | t ˚C = (t+273.15) K |
| Luminous flux | lumen | lm | 1 lm = 1 cd·sr |
| Illuminance | lux | lx | 1 lx = 1 lm/$m^2$ |

### Table 4: Unit combined with SI unit

| Quantity | Name | Symbol of unit |
|---|---|---|
| Time | minute | min |
| | hour | h |
| | day | d |
| Plane angle | degree | ° |
| | minute | ' |
| | second | " |
| Volume | liter | l, L |
| Weight | ton | t |

### Table 5: Prefix

| Multiples powered to unit | Prefix | |
|---|---|---|
| | Name | Symbol |
| $10^{18}$ | exa | E |
| $10^{15}$ | peta | P |
| $10^{12}$ | tera | T |
| $10^{9}$ | giga | G |
| $10^{6}$ | mega | M |
| $10^{3}$ | kilo | k |
| $10^{2}$ | hecto | h |
| 10 | deca | da |
| $10^{-1}$ | deci | d |
| $10^{-2}$ | centi | c |
| $10^{-3}$ | milli | m |
| $10^{-6}$ | micro | μ |
| $10^{-9}$ | nano | n |
| $10^{-12}$ | pico | p |
| $10^{-15}$ | femto | f |
| $10^{-18}$ | atto | a |



## Major compatible unit

| Quantity | Symbol of conventional unit | Symbol of SI unit and compatible unit | Conversion value |
|---|---|---|---|
| Length | μ (micron) | μm | 1 μ = 1 μm (micrometer) |
| Acceleration | Gal | m/$s^2$ | 1 Gal = $10^{-2}$ m/$s^2$ |
| | G | m/$s^2$ | 1 G = 9.80665 m/$s^2$ |
| Frequency | c/s, c | Hz | 1 c/s = Hz |
| Revolving speed, Number of revolutions | rpm | $s^{-1}$ or $min^{-1}$, r/min | 1 rpm = 1 $min^{-1}$ |
| Weight | kgf | – | Same value |
| Mass | – | kg | |
| Weight flow rate | kgf/s | – | Same value |
| Mass flow rate | – | kg/s | |
| Specific weight | kgf/$m^3$ | – | Same value |
| Density | – | kg/$m^3$ | |
| Specific volume | $m^3$/kgf | $m^3$/kg | Same value |
| Load | kgf | N | 1 kgf = 9.80665 N |
| Force | kgf | N | 1 kgf = 9.80665 N |
| | dyn | N | 1 dyn = $10^{-5}$ N |
| Moment of force | kgf-m | N·m | 1 kgf-m = 9.806 N·m |
| Pressure | kgf/$cm^2$ | Pa, bar (1) or kgf/$cm^2$ | 1 kgf/$cm^2$ = 9.80665 x $10^4$ Pa |
| | | | = 0.980665 bar |
| | at (Engineering atmospheric pressure) | Pa | 1 at = 9.80665 x $10^4$ Pa |
| | atm (Atmospheric pressure) | Pa | 1 atm = 1.01325 x $10^5$ Pa |
| | $mH_2O$, mAq | Pa | 1 $mH_2O$ = 9.80665 x $10^3$ Pa |
| | mmHg | Pa or mmHg (2) | 1 mmHg = 133.322 Pa |
| | Torr | Pa | |
| Stress | kgf/$mm^2$ | Pa or N/$m^2$ | 1 kgf/$mm^2$ = 9.80665 x $10^6$ Pa |
| | | | =9.80665 x $10^6$ N/$m^2$ |
| | kgf/$cm^2$ | Pa or N/$m^2$ | 1 kgf/$cm^2$ = 9.80665 x $10^4$ Pa |
| | | | = 9.80665 x $10^4$ N/$m^2$ |
| Elastic modulus | kgf/$m^2$ | Pa or N/$m^2$ | 1 kgf/$m^2$ = 9.80665 Pa = 9.80665 N/$m^2$ |
| | | | 1 kgf/$cm^2$ = 9.80665 x $10^4$ N/$m^2$ |
| Energy, Work | kgf·m | J (joule) | 1 kgf·m = 9.80665 J |
| | erg | J | 1 erg = $10^{-7}$ J |
| Work efficiency, Power | kgf·m/s | W (watt) | 1 kgf·m/s = 9.80665 W |
| | PS | W | 1 PS = 0.7355 kW |
| Viscosity | PP | Pa·s | 1 P = 0.1 Pa·s |
| Kinetic viscosity | St | $mm^2$/s | $10^{-2}$ St = 1 $mm^2$/s |
| Thermodynamic temperature | K | K (kelvin) | 1 K = 1 K |
| Temperature interval | deg | K (3) | 1 deg = 1 K |
| Amount of heat | cal | J | 1 cal = 4.18605 J |
| Heat capacity | cal/˚C | J/K (3) | 1 cal/˚C = 4.18605 J/K |
| Specific heat, Specific heat capacity | cal/ (kgf·˚C) | cal/ (kgf·K)(3) | 1 cal/ (kgf·˚C) = 4.18605 J/ (kg·K) |
| Entropy | cal/K | J/K | 1 cal/K = 4.18605 J/K |
| Specific entropy | cal/ (kgf·K) | J/(kg·K) | 1 cal/ (kgf·K) = 4.18605 J/ (kg·K) |
| Internal energy (Enthalpy) | cal | J | 1 cal = 4.18605 J |
| Specific internal energy (Specific enthalpy) | cal/kgf | J/kg | 1 cal/kgf = 4.18605 J/kg |
| Heat flux | cal/h | W | 1 kcal/h = 1.16279 W |
| Heat flux density | cal/ (h·$m^2$) | W/$m^2$ | 1 kcal/ (h·$m^2$) = 1.16279 W/$m^2$ |
| Thermal conductivity | cal/ (h·m·˚C) | W/ (m·K) (3) | 1 kcal/ (h·m·˚C) = 1.16279 W/ (m·K) |
| Coefficient of thermal conductivity | cal/ (h·$m^2$·˚C) | W/ ($m^2$·K) (3) | 1 kcal/ (h·$m^2$·˚C) = 1.16279 W/ ($m^2$·K) |
| Intensity of magnetic field | Oe | A/m | 1 Oe = $10^3$ / (4π) A/m |
| Magnetic flux | Mx | Wb (weber) | 1 Mx = $10^{-8}$ Wb |
| Magnetic flux density | Gs,G | T (tesla) | 1 Gs = $10^{-4}$ T |

**Note**
(1) Applicable to liquid pressure. Also applicable to atmospheric pressure of meteorological data, when "bar" is used in international standard.
(2) Applicable to scale or indication of blood pressure manometers.
(3) "˚C" can be substituted for "K".

# Selecting motor capacity

## Flow of motor selection

**1. Definition of mechanism to be driven by motor.**

Define details of individual mechanical components (ball screw length, lead and pulley diameters, etc.)

**<Typical mechanism>**

Ball screw mechanism

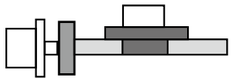

Belt mechanism

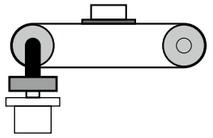

Rack & pinion, etc.

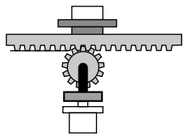

**2. Definition of operating pattern.**

Acceleration/deceleration time, Constant-velocity time, Stop time, Cycle time, Travel distance

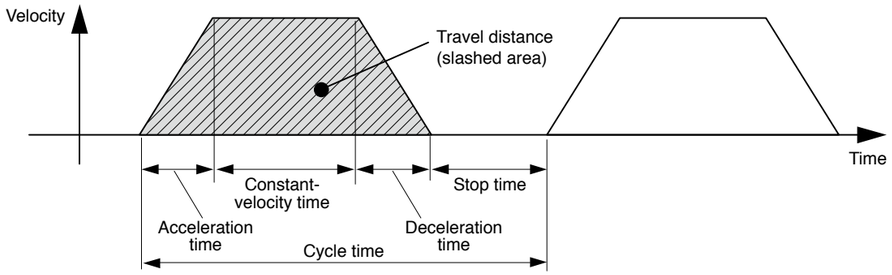


Note) Selection of motor capacity significantly varies depending on the operating pattern.
The motor capacity can be reduced if the acceleration/deceleration time and stop time are set as long as possible.

**3. Calculation of load inertia and inertia ratio.**

Calculate load inertia for each mechanical component. (Refer to "General inertia calculation method" described later.)
Divide the calculated load inertia by the inertia of the selected motor to check the inertia ratio.
For calculation of the inertia ratio, note that the catalog value of the motor inertia is expressed as "× $10^{-4}$ kg·m²".

**4. Calculation of motor velocity**

Calculate the motor velocity from the moving distance, acceleration / deceleration time and constant-velocity time.

**5. Calculation of torque**

Calculate the required motor torque from the load inertia, acceleration/deceleration time and constant-velocity time.

**6. Calculation of motor**

Select a motor that meets the above 3 to 5 requirements.



## Description on the items related to motor selection

**1. Torque**

**(1) Peak torque**

Indicate the maximum torque that the motor requires during operation (mainly in acceleration and deceleration steps). The reference value is 80 % or less of the maximum motor torque. If the torque is a negative value, a regenerative discharge resistor may be required.

**(2) Traveling torque, Stop holding torque**

Indicates the torque that the motor requires for a long time. The reference value is 80 % or less of the rated motor torque. If the torque is a negative value, a regenerative discharge resistor may be required.

**Traveling torque calculation formula for each mechanism**

**Ball screw mechanism**

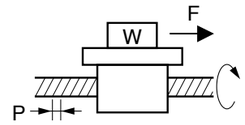


Traveling torque $T_f = \frac{P}{2\pi\eta}(\mu g W + F)$

**W** : Weight [kg]
**P** : Lead [m]
**F** : External force [N]
η : Mechanical efficiency
μ : Coefficient of friction
g : Acceleration of gravity 9.8 [m/s²]

**Belt mechanism**

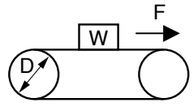


Traveling torque $T_f = \frac{D}{2\eta}(\mu g W + F)$

**W** : Weight [kg]
**P** : Pulley diameter [m]
**F** : External force [N]
η : Mechanical efficiency
μ : Coefficient of friction
g : Acceleration of gravity 9.8 [m/s²]

**(3) Effective torque**

Indicates a root-mean-square value of the total torque required for running and stopping the motor per unit time.
The reference value is approx. 80 % or less of the rated motor torque.

$$T_{rms} = \sqrt{\frac{T_a^2 \times t_a + T_f^2 \times t_b + T_d^2 \times t_d}{t_c}}$$

$T_a$ : Acceleration torque [N·m]
$T_f$ : Traveling torque [N·m]
$T_d$ : Deceleration torque [N·m]
$t_a$ : Acceleration time [s]
$t_b$ : Constant-velocity time [s]
$t_d$ : Deceleration time [s]
$t_c$ : Cycle time [s] (Run time + Stop time)

**2. Motor velocity**

**Maximum velocity**

Maximum velocity of motor in operation: The reference value is the rated velocity or lower value.
When the motor runs at the maximum velocity, you must pay attention to the motor torque and temperature rise.
For actual calculation of motor velocity, see "Example of motor selection" described later.

# Selecting motor capacity

## Description on the items related to motor selection

**3. Inertia and inertia ratio**

Inertia is like the force to retain the current moving condition.
Inertia ratio is calculated by dividing load inertia by rotor inertia.
Generally, for motors with 750 W or lower capacity, the inertia ratio should be “20” or less. For motors with 1000 W or higher capacity, the inertia ratio should be “10” or less.
If you need quicker response, a lower inertia ratio is required.
(For example, when the motor takes several seconds in acceleration step, the inertia ratio can be further increased.)

### General inertia calculation method

| Shape | J calculation formula | Shape | J calculation formula |
|---|---|---|---|
| **Disk**  | $J = \frac{1}{8} W D^2$ [kg·m²]<br>**W** : Weight [kg]<br>**D** : Outer diameter [m] | **Hollow cylinder** 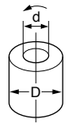 | $J = \frac{1}{8} W (D^2 + d^2)$ [kg·m²]<br>**W** : Weight [kg]<br>**D** : Outer diameter [m]<br>**d** : Inner diameter [m] |
| **Prism** 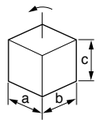 | $J = \frac{1}{12} W (a^2 + b^2)$ [kg·m²]<br>**W** : Weight [kg]<br>**a, b, c** : Side length [m] | **Uniform rod** 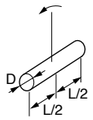 | $J = \frac{1}{48} W (3D^2 + 4L^2)$ [kg·m²]<br>**W** : Weight [kg]<br>**D** : Outer diameter [m]<br>**L** : Length [m] |
| **Straight rod** 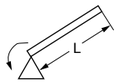 | $J = \frac{1}{3} W L^2$ [kg·m²]<br>**W** : Weight [kg]<br>**L** : Length [m] | **Separated rod** 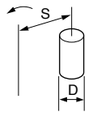 | $J = \frac{1}{8} W D^2 + W S^2$ [kg·m²]<br>**W** : Weight [kg]<br>**D** : Outer diameter [m]<br>**S** : Distance [m] |
| **Reduction gear** 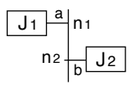 | Inertia on shaft "a"<br>$J = J_1 + \left(\frac{n_2}{n_1}\right)^2 J_2$ [kg·m²]<br>$n_1$ : A rotational speed of a shaft [r/min]<br>$n_2$ : A rotational speed of b shaft [r/min] | | |
| **Conveyor** 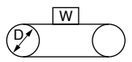 | $J = \frac{1}{4} W D^2$ [kg·m²]<br>**W** : Workpiece weight on conveyor [kg]<br>**D** : Drum diameter [m]<br>* Excluding drum J | **Ball screw** 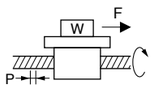 | $J = J_B + \frac{W \cdot P^2}{4\pi^2}$ [kg·m²]<br>**W** : Weight [kg]<br>**P** : Lead [m]<br>$J_B$ : J of ball screw |

If weight (W [kg]) is unknown, calculate it with the following formula:

Weight W [kg] = Density ρ [kg/m³] × Volume V [m³]

Density of each material

Iron ρ = 7.9 × 10³ [kg/m³]  Aluminum ρ = 2.8 × 10³ [kg/m³]

Brass ρ = 8.5 × 10³ [kg/m³]



## To drive ball screw mechanism

**1. Example of motor selection for driving ball screw mechanism**

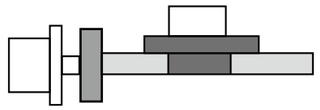

Workpiece weight $W_A$ = **10** [kg]
Ball screw length $B_L$ = **0.5** [m]
Ball screw diameter $B_D$ = **0.02** [m]
Ball screw lead $B_P$ = **0.02** [m]
Ball screw efficiency $B_\eta$ = **0.9**
Travel distance **0.3** [m]
Coupling inertia $J_C = 10 \times 10^{-6}$ [kg·m²] (Use manufacturer-specified catalog value, or calculation value.)

**2. Running pattern :**

Acceleration time $t_a$ = **0.7** [s]
Constant-velocity time $t_b$ = **1.3** [s]
Deceleration time $t_d$ = **0.7** [s]
Cycle time $t_c$ = **4** [s]
Travel distance **0.3** [m]

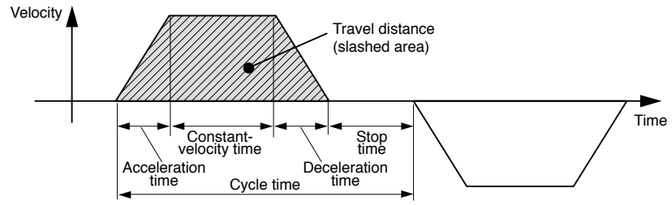


**3. Ball screw weight**

$$B_W = \rho \times \pi \times \left(\frac{B_D}{2}\right)^2 \times B_L = 7.9 \times 10^3 \times \pi \times \left(\frac{0.02}{2}\right)^2 \times 0.5$$
$$= 1.24 \text{ [kg]}$$

**4. Load inertia**

$$J_L = J_C + J_B + J_W = J_C + \frac{1}{8} B_W \times B_D^2 + \frac{W_A \cdot B_P^2}{4\pi^2}$$
$$= 0.00001 + (1.24 \times 0.02^2) / 8 + 10 \times 0.02^2 / 4\pi^2$$
$$= 1.73 \times 10^{-4} \text{ [kg·m}^2\text{]}$$

**5. Provisional motor selection**

In case of GP series 50 W, gear ratio 1/5. Permissible load inertia moment = 3.42 × 10⁻⁴ [kg·m²]

**6. Inertia moment compared**

Permissible load inertia moment = 3.42 × 10⁻⁴ [kg·m²] > Load inertia
= 1.73 × 10⁻⁴ [kg·m²] Cleared specification

**7. Calculation of maximum velocity (Vmax)**

$$\frac{1}{2} \times \text{Acceleration time} \times V_{max} + \text{Constant-velocity time} \times V_{max} + \frac{1}{2} \times \text{Deceleration time} \times V_{max} = \text{Travel distance}$$
$$\frac{1}{2} \times 0.7 \times V_{max} + 1.3 \times V_{max} + \frac{1}{2} \times 0.7 \times V_{max} = 0.3$$
$$2.0 \times V_{max} = 0.3$$
$$V_{max} = 0.3 / 2.0 = 0.15 \text{ [m/s]}$$

**8. Calculation of motor velocity (N [r/min]) Ball screw lead per resolution: $B_P$ = 0.02 [m]**

N = 0.15 / 0.02 = 7.5 [r/s]
= 7.5 × 60 = 450 [r/min] < 600 [r/min] (rated rotation speed of GP series 50 W, gear ratio 1/5)

**9. Calculation of torque**

Traveling torque
$$T_f = \frac{B_P}{2\pi B_\eta}(\mu g W_A + F) = \frac{0.02}{2\pi \times 0.9}(0.1 \times 9.8 \times 10 + 0)$$
$$= 0.035 \text{ [N·m]}$$

Acceleration torque
$$T_a = \frac{J_L \times 2\pi N \text{ [r/s]}}{\text{Acceleration time [s]}} + \text{Traveling torque} = \frac{1.73 \times 10^{-4} \times 2\pi \times 7.5}{0.7} + 0.035$$
$$= 0.012 + 0.035 = 0.047 \text{ [N·m]}$$

Deceleration torque
$$T_d = \frac{J_L \times 2\pi N \text{ [r/s]}}{\text{Deceleration time [s]}} - \text{Traveling torque} = \frac{1.73 \times 10^{-4} \times 2\pi \times 7.5}{0.7} - 0.035$$
$$= 0.012 - 0.035 = -0.023 \text{ [N·m]}$$

# Selecting motor capacity

**10. Verification of maximum torque**

Acceleration torque = $T_a$

= 0.047 [N·m] < 0.71 [N·m] (GP series 50 W, 1/5 gear, Permissible torque at output shaft of gear head)

**11. Verification of effective torque**

$$T_{rms} = \sqrt{\frac{T_a^2 \times t_a + T_f^2 \times t_b + T_d^2 \times t_d}{t_c}}$$

$$= \sqrt{\frac{0.047^2 \times 0.7 + 0.035^2 \times 1.3 + (-0.023)^2 \times 0.7}{4}}$$

= 0.030 [N·m] < 0.71 [N·m] (GP series 50 W, 1/5 gear, Permissible torque at output shaft of gear head)

**12. Load torque, load inertia moment are cleared specification.**

## Example of motor selection for timing belt mechanism

**1.Mechanism**

| | |
|---|---|
| Workpiece weight | $W_A$ = **2** [kg] (including belt) |
| Pulley diameter | $P_D$ = **0.05** [m] |
| Pulley weight | $W_P$ = **0.5** [kg] (Use manufacturer-specified catalog value, or calculation value.) |
| Mechanical efficiency | $B_\eta$ = **0.8** |
| Coupling inertia | $J_C$ = **0** (Direct connection to motor shaft) |

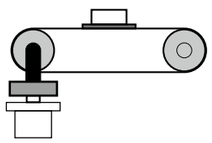

**2. Running pattern**

| | |
|---|---|
| Acceleration time | $t_a$ = **1.0** [s] |
| Constant-velocity time | $t_b$ = **1.0** [s] |
| Deceleration time | $t_d$ = **1.0** [s] |
| Cycle time | $t_c$ = **4** [s] |
| Travel distance | **1** [m] |

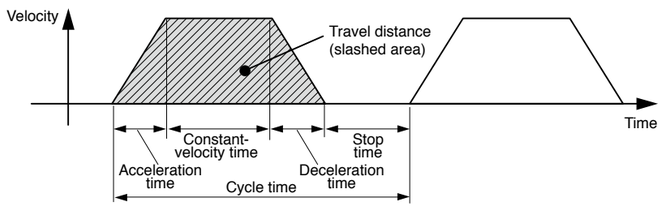


**3. Load inertia**

$J_L = J_C + J_B + J_P$

$$= J_C + \frac{1}{4} W_A \times P_D^2 + \frac{1}{8} W_P \times P_D^2 \times 2$$

$$= 0 + \frac{1}{4} \times 2 \times 0.05^2 + \frac{1}{8} \times 0.5 \times 0.05^2 \times 2$$

$= 0.00156 = 15.6 \times 10^{-4}$ [kg·m²]

**4. Provisional motor selection**

In case of GP series 50 W, gear ratio 1/15. Permissible load inertia moment = $30.6 \times 10^{-4}$ [kg·m²]

**5. Inertia moment compared**

$30.6 \times 10^{-4}$ [kg·m²] > $15.6 - 10^{-4}$ [kg·m²]



**6. Calculation of maximum velocity (Vmax)**

$\frac{1}{2}$ × Acceleration time × Vmax + Constant-velocity time × Vmax + $\frac{1}{2}$ × Deceleration time × Vmax = Travel distance

$\frac{1}{2} \times 1.0 \times V_{max} + 1.0 \times V_{max} + \frac{1}{2} \times 1.0 \times V_{max} = 1$

$2.0 \times V_{max} = 1$

$V_{max} = 1 / 2.0 = 0.5$ [m/s]

**7. Calculation of motor velocity (N [r/min])**

A single rotation of pulley : $\pi \times P_D = 0.157$ [m]

N = 0.5 / 0.157 = 3.18 [r/s]

= 3.18 × 60 = 191 [r/min] < 200 [r/min] (rated rotation speed of GP series 50 W, gear ratio 1/15)

**8. Calculation of torque**

Traveling torque $T_f = \frac{P_D}{2\eta}(\mu g W_A + F) = \frac{0.05}{2 \times 0.8}(0.1 \times 9.8 \times 2 + 0)$

= 0.061 [N·m]

Acceleration torque $T_a = \frac{J_L \times 2\pi N \text{ [r/s]}}{\text{Acceleration time [s]}}$ + Traveling torque

$$= \frac{15.6 \times 10^{-4} \times 2\pi \times 3.18}{1.0} + 0.061$$

= 0.031 + 0.061 = 0.092 [N·m]

Deceleration torque $T_d = \frac{J_L \times 2\pi N \text{ [r/s]}}{\text{Deceleration time [s]}}$ – Traveling torque

$$= \frac{15.6 \times 10^{-4} \times 2\pi \times 3.18}{1.0} - 0.061$$

= 0.031 – 0.061 = –0.03 [N·m]

**9. Verification of maximum torque**

Acceleration torque

$T_a$ = 0.092 [N·m] < 2.2 [N·m] (GP series 50 W, 1/15 gear, Permissible torque at output shaft of gear head )

**10. Verification of effective torque**

$$T_{rms} = \sqrt{\frac{T_a^2 \times t_a + T_f^2 \times t_b + T_d^2 \times t_d}{t_c}}$$

$$= \sqrt{\frac{0.092^2 \times 1.0 + 0.061^2 \times 1.0 + (-0.03)^2 \times 1.0}{4}}$$

= 0.057 [N·m] < 2.2 [N·m] (GP series 50 W, 1/15 gear, Permissible torque at output shaft of gear head)

**11. A GP series 50 W, 1/15 gear selected by following the above procedure will cause no problem.**

# Request sheet for motor selection

## Request for motor selection Ⅰ : Ball screw drive

### 1. Driven mechanism and running data

| | | |
|---|---|---|
| 1) | Travel distance of the work load per one cycle | $\ell_1$: mm |
| 2) | Cycle time | $t_0$: s |
| | (Fill in items 3) and 4) if required.) | |
| 3) | Acceleration time | $t_a$: s |
| 4) | Deceleration time | $t_d$: s |
| 5) | Stopping time | $t_s$: s |
| 6) | Max. velocity | V: mm/s |
| 7) | External force | F: N |
| 8) | Positioning accuracy of the work load | ± mm |
| 9) | Total weight of the work load and the table | $W_A$: kg |
| 10) | Power supply voltage | V |
| 11) | Diameter of the ball screw | mm |
| 12) | Total length of the ball screw | mm |
| 13) | Lead of the ball screw | mm |
| 14) | Traveling direction (horizontal, vertical etc.) | |

Running pattern

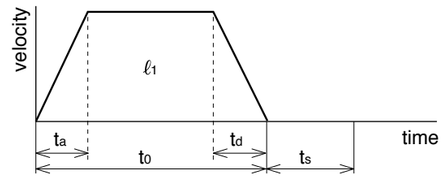


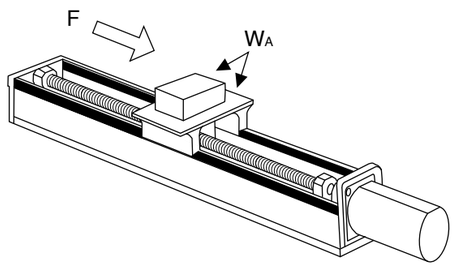


### 2. Other data (Fill the details on specific mechanism and its configurations in the following blank.)

Company name :
Department/Section :
Name :
Address :
Tel :
Fax :
E-mail address:



# Request sheet for motor selection

## Request for motor selection Ⅱ : Timing pulley + Ball screw drive

### 1. Driven mechanism and running data

| | | |
|---|---|---|
| 1) | Travel distance of the work load per one cycle | $\ell_1$: mm |
| 2) | Cycle time | $t_0$: s |
| | (Fill in items 3) and 4) if required.) | |
| 3) | Acceleration time | $t_a$: s |
| 4) | Deceleration time | $t_d$: s |
| 5) | Stopping time | $t_s$: s |
| 6) | Max. velocity | V: mm/s |
| 7) | External force | F: N |
| 8) | Positioning accuracy of the work load | ± mm |
| 9) | Total weight of the work load and the table | $W_A$: kg |
| 10) | Power supply voltage | V |
| 11) | Diameter of the ball screw | mm |
| 12) | Total length of the ball screw | mm |
| 13) | Lead of the ball screw | mm |
| 14) | Traveling direction (horizontal, vertical etc.) | |

| | | Motor side | Ball screw side |
|---|---|---|---|
| 15) | Diameter of the pulley | $D_1$: mm | $D_2$: mm |
| 16) | Weight of the pulley | $W_1$: kg | $W_2$: kg |
| | (or item 17) and 18)) | | |
| 17) | Width of the pulley | $L_1$: mm | |
| 18) | Material of the pulley | | |
| 19) | Weight of the belt | $W_M$: kg | |

Running pattern

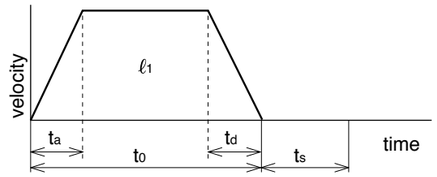


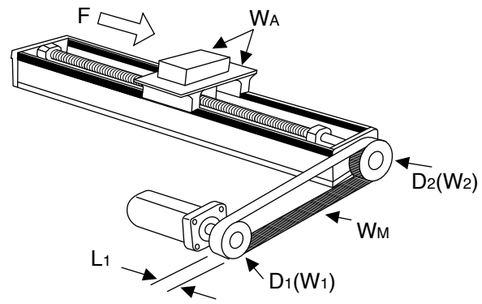


### 2. Other data (Fill the details on specific mechanism and its configurations in the following blank.)

Company name :
Department/Section :
Name :
Address :
Tel :
Fax :
E-mail address:

# Request sheet for motor selection

## Request for motor selection Ⅲ : Belt drive

### 1. Driven mechanism and running data

| | | |
|---|---|---|
| 1) | Travel distance of the work load per one cycle | $\ell_1$: mm |
| 2) | Cycle time | $t_0$: s |
| | (Fill in items 3) and 4) if required.) | |
| 3) | Acceleration time | $t_a$: s |
| 4) | Deceleration time | $t_d$: s |
| 5) | Stopping time | $t_s$: s |
| 6) | Max. velocity | V: mm/s |
| 7) | External force | F: N |
| 8) | Positioning accuracy of the work load | ± mm |
| 9) | Total weight of the work load | $W_A$: kg |
| 10) | Power supply voltage | V |
| 11) | Weight of the belt | $W_M$: kg |
| 12) | Diameter of the driving pulley | $D_1$: mm |
| 13) | Total weight of the pulley | $W_1$: kg |

Running pattern

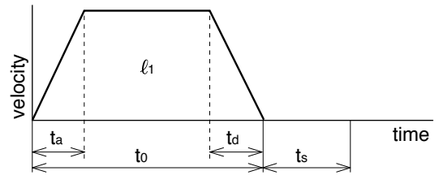


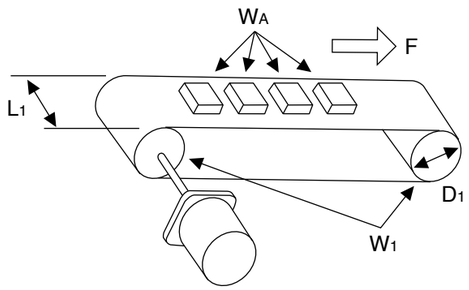


(or item 14) and 15))

| | | |
|---|---|---|
| 14) | Width of the pulley | $L_1$: mm |
| 15) | Material of the pulley | |
| 16) | Traveling direction (horizontal, vertical etc.) | |

### 2. Other data (Fill the details on specific mechanism and its configurations in the following blank.)

Company name :
Department/Section :
Name :
Address :
Tel :
Fax :
E-mail address:



# Request sheet for motor selection

## Request for motor selection Ⅳ : Timing pulley + Belt drive

### 1. Driven mechanism and running data

| | | |
|---|---|---|
| 1) | Travel distance of the work load per one cycle | $\ell_1$: mm |
| 2) | Cycle time | $t_0$: s |
| | (Fill in items 3) and 4) if required.) | |
| 3) | Acceleration time | $t_a$: s |
| 4) | Deceleration time | $t_d$: s |
| 5) | Stopping time | $t_s$: s |
| 6) | Max. velocity | V: mm/s |
| 7) | External force | F: N |
| 8) | Positioning accuracy of the work load | ± mm |
| 9) | Total weight of the work load | $W_A$: kg |
| 10) | Power supply voltage | V |
| 11) | Weight of motor side belt | $W_M$: kg |

| | | Motor side | Belt side |
|---|---|---|---|
| 12) | Diameter of the pulley | $D_1$: mm | $D_2$: mm |
| 13) | Weight of the pulley | $W_1$: kg | $W_2$: kg |

(or item 14) and 15))

| | | |
|---|---|---|
| 14) | Width of the belt | $L_1$: mm |
| 15) | Material of the pulley | |

| | | Motor side | Belt side |
|---|---|---|---|
| 16) | Diameter of the pulley | $D_3$: mm | $D_4$: mm |
| 17) | Weight of the pulley | $W_3$: kg | $W_4$: kg |

(or item 18) and 19))

| | | |
|---|---|---|
| 18) | Width of the pulley | $L_2$: mm |
| 19) | Material of the pulley | |
| 20) | Weight of the belt | $W_L$: kg |
| 21) | Traveling direction (horizontal, vertical etc.) | |

Running pattern

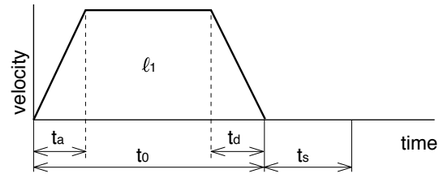


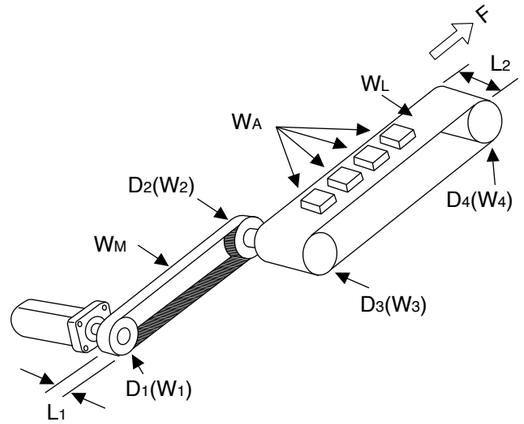


### 2. Other data (Fill the details on specific mechanism and its configurations in the following blank.)

Company name :
Department/Section :
Name :
Address :
Tel :
Fax :
E-mail address:

# Request sheet for motor selection

## Request for motor selection Ⅴ : Turntable drive

### 1. Driven mechanism and running data

| | | | |
|---|---|---|---|
| 1) | Travel distance of the work load per one cycle | $d_1$: | deg |
| 2) | Cycle time | $t_0$: | s |
| | (Fill in items 3) and 4) if required.) | | |
| 3) | Acceleration time | $t_a$: | s |
| 4) | Deceleration time | $t_d$: | s |
| 5) | Stopping time | $t_s$: | s |
| 6) | Max. rotational speed of the table | v: | deg/s |
| | (or) | V: | r/s |
| 7) | Positioning accuracy of the work load | ± | deg |
| 8) | Weight of one work load | $W_A$: | kg |
| 9) | Driving radius of the center of gravity of the work | $R_1$: | mm |
| 10) | Diameter of the table | $D_1$: | mm |
| 11) | Mass of the table | $W_1$: | kg |
| 12) | Diameter of the table support | $T_1$: | mm |
| 13) | Power supply voltage | | V |

| | | Prism | Cylinder |
|---|---|---|---|
| 14) | Dimensions of the work load | a: mm | a: mm |
| | | b: mm | b: mm |
| | | c: mm | c: mm |
| 15) | Number of work loads | | pcs |

Running pattern

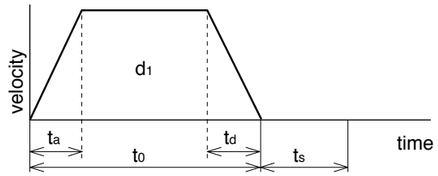


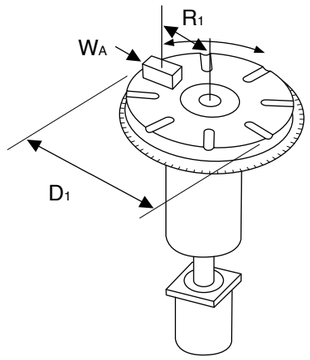


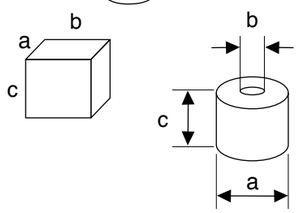


### 2. Other data (Fill the details on specific mechanism and its configurations in the following blank.)

| | |
|---|---|
| | Company name : |
| | Department/Section : |
| | Name : |
| | Address : |
| | Tel : |
| | Fax : |
| | E-mail address: |



# Request sheet for motor selection

## Request for motor selection Ⅵ : Timing pulley + Turntable drive

### 1. Driven mechanism and running data

| | | | |
|---|---|---|---|
| 1) | Travel distance of the work load per one cycle | $d_1$: | deg |
| 2) | Cycle time | $t_0$: | s |
| | (Fill in items 3) and 4) if required.) | | |
| 3) | Acceleration time | $t_a$: | s |
| 4) | Deceleration time | $t_d$: | s |
| 5) | Stopping time | $t_s$: | s |
| 6) | Max. rotational speed of the table | v: | deg/s |
| | (or) | V: | r/s |
| 7) | Positioning accuracy of the work load | ± | deg |
| 8) | Weight of one work load | $W_A$: | kg |
| 9) | Driving radius of the center of gravity of the work | $R_1$: | mm |
| 10) | Diameter of the table | $D_1$: | mm |
| 11) | Mass of the table | $W_1$: | kg |
| 12) | Diameter of the table support | $T_1$: | mm |
| 13) | Power supply voltage | | V |
| 14) | Dimension of the work load | (Prism) a: mm | (Cylinder) a: mm |
| | | b: mm | b: mm |
| | | c: mm | c: mm |
| 15) | Number of work loads | | pcs |

| | | Motor side | Turntable side |
|---|---|---|---|
| 16) | Diameter of the pulley | $D_2$: mm | $D_3$: mm |
| 17) | Weight of the pulley | $W_2$: kg | $W_3$: kg |
| | (or item 18) and 19)) | | |
| 18) | Width of the pulley | $L_1$: | mm |
| 19) | Material of the pulley | | |
| 20) | Weight of the belt | $W_M$: | kg |

Running pattern

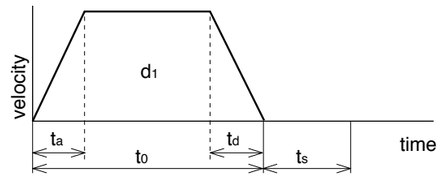


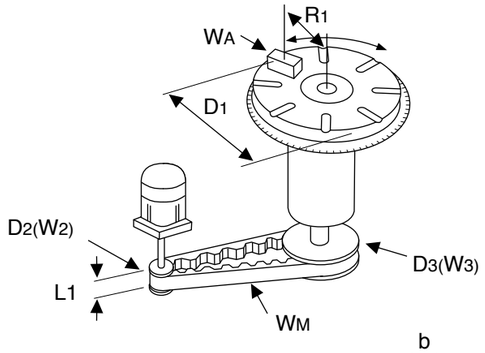


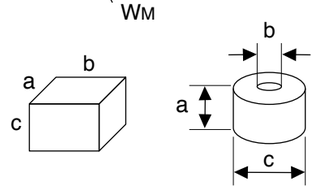


### 2. Other data (Fill the details on specific mechanism and its configurations in the following blank.)

| | |
|---|---|
| | Company name : |
| | Department/Section : |
| | Name : |
| | Address : |
| | Tel : |
| | Fax : |
| | E-mail address: |

# Request sheet for motor selection

## Request for motor selection Ⅶ : Roller feed drive

### 1. Driven mechanism and running data

| | | | |
|---|---|---|---|
| 1) | Travel distance of the work load per one cycle | $\ell_1$: | mm |
| 2) | Cycle time | $t_0$: | s |
| | (Fill in items 3) and 4) if required.) | | |
| 3) | Acceleration time | $t_a$: | s |
| 4) | Deceleration time | $t_d$: | s |
| 5) | Stopping time | $t_s$: | s |
| 6) | Max. velocity | v: | mm/s |
| 7) | External pulling force | F: | N |
| 8) | Positioning accuracy of the work load | ± | mm |
| 9) | Number of rollers | | pcs |
| 10) | Power supply voltage | | V |
| 11) | Diameter of the roller | $D_1$: | mm |
| 12) | Mass of the roller | $W_1$: | kg |

Running pattern

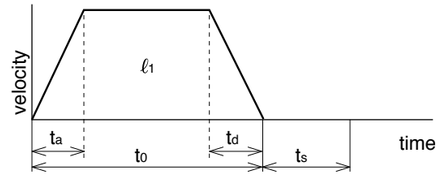


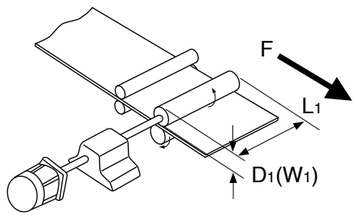


(or item 13) and 14))

| | | | |
|---|---|---|---|
| 13) | Width of the roller | $L_1$: | mm |
| 14) | Material of the roller | | |

### 2. Other data (Fill the details on specific mechanism and its configurations in the following blank.)

Company name :

Department/Section :

Name :

Address :

Tel :

Fax :

E-mail address:



# Request sheet for motor selection

## Request for motor selection Ⅷ : Driving with Rack & Pinion

### 1. Driven mechanism and running data

| | | | |
|---|---|---|---|
| 1) | Travel distance of the work load per one cycle | $\ell_1$: | mm |
| 2) | Cycle time | $t_0$: | s |
| | (Fill in items 3) and 4) if required.) | | |
| 3) | Acceleration time | $t_a$: | s |
| 4) | Deceleration time | $t_d$: | s |
| 5) | Stopping time | $t_s$: | s |
| 6) | Max. velocity | V: | mm/s |
| 7) | External force | F: | N |
| 8) | Positioning accuracy of the work load | ± | mm |
| 9) | Total weight of the work load | $W_A$: | kg |
| 10) | Power supply voltage | | V |
| 11) | Diameter of the pinion | $D_3$: | mm |
| 12) | Mass of the pinion | $W_3$: | kg |
| 13) | Traveling direction (horizontal, vertical, etc.) | | |

Running pattern

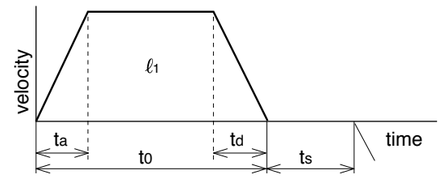


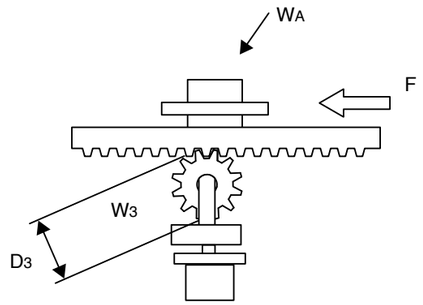


### 2. Other data (Fill the details on specific mechanism and its configurations in the following blank.)

Company name :

Department/Section :

Name :

Address :

Tel :

Fax :

E-mail address:

# Conformance to international safety standards

## Conformance to international standards

### EC Directives

The EC directives apply to all such electronic products as those having specific functions and directly sold to general consumers in EU countries. These products are required to meet the EU unified standards and to be furnished with CE marking.
Our brushless motor and brushless amplifier meet the EC Directives for Low Voltage Equipment so that the machine or equipment comprising our brushless motor and brushless amplifier can meet relevant EC Directives.

### Conformity to UL Standards

Observe the following conditions of (1) and (2) to make the system conform to UL508C (E164620).
(1) Use the driver in an environment of Pollution Degree 2 or 1 prescribed in IEC60664-1.
(e.g. Install in the control box with IP54 enclosure.)
(2) Make sure to install a circuit breaker or fuse which are UL recognized (Listed Ⓤ marked) between the power supply and the noise filter.
Use a copper cable with temperature rating of 75 °C or higher.

### EMC Directives

Our brushless motor and brushless amplifier can meet EMC Directives and related standards. However, to meet these requirements, the systems must be limited with respect to configuration and other aspects, e.g. the installation and some special wiring conditions must be met. This means that in some cases machines and equipment comprising our brushless motor and brushless amplifier may not satisfy the requirements for wiring and grounding conditions specified by the EMC Directives. Therefore, conformance to the EMC Directives (especially the requirements for emission noise and noise terminal voltage) should be examined based on the final products that include our system.

| | Applicable standards | | Installation condition |
|---|---|---|---|
| UL | UL1004<br>UL508C | Standard for electric motor<br>Standard for electric converter equipment | Class I equipment<br>Pollution degree 2<br>SCCR *1 |
| CSA<br>(c-UL) | C22.2 No.14<br>C22.2 No.100 | Industrial control equipment.<br>Standard for electric motor | |
| CE | EN61800-5-1 | Adjustable speed electrical power drive systems.<br>– Safety requirements. Electrical, thermal and energy | Overvoltage category II<br>Class I equipment<br>Pollution degree 2<br>Group 1<br>Class A<br>Category III<br>2nd enviroment |
| | EN60034-1 | Standard for rotary electric machine (low voltage directive) | |
| | EN60034-5 | Standard for rotary electric machine (low voltage directive) | |
| | EN61800-3 | Adjustable speed electrical power drive systems.<br>– EMC requirements and specific test methods | |
| | EN55011 | Radio interference wave characteristics of industrial, scientific, and medical high-frequency equipment | |
| | EN61000-6-2 | Standards for immunity in industrial environment (EMC directive) | |
| CCC | GB12350 | Motor safety standard | |
| KC | Radio Waves Act<br>(South Korea) (KC) *2 | Class A Instrument<br>(commercial broadcast communications equipment) | – |

*1 SCCR: Symmetrical current 5,000 Arms, Max. 240 V
Motor over-temperature protection is not provided.
Motor over-load-temperature protection shall be provided at the final installation upon required by the NEC (National Electric Code).
*2 Information related to the Korea Radio Law
This brushless amplifier is a Class A commercial broadcasting radio wave generator not designed for home use. The user and dealer should be aware of this fact.

A 급 기기 (업무용 방송통신기자재)
이 기기는 업무용(A 급) 전자파적합기기로서 판매자
또는 사용자는 이 점을 주의하시기 바라며, 가정외의
지역에서 사용하는 것을 목적으로 합니다.

( 대상기종 : Brushless Amplifier)



## Configuration of peripheral equipment

| | |
|---|---|
| Power supply | · 100 V system: Single phase 100 V ± 10 % to 120 V ± 10 %, 50 Hz/60 Hz<br>200 V system: Single/3-phase 200 V ± 10 % to 240 V ± 10 %, 50 Hz/60 Hz<br>· Use the equipment under the environment of overvoltage category II specified by IEC60664-1.<br>In order to obtain overvoltage category III, insert a transformer conforming to EN standard or IEC standard to the input of brushless motor.<br>· Use an electric wire size suitable to EN60204-1. |
| MCCB<br>(breaker)<br>Fuse | Be sure to connect a specified MCCB certified by IEC standard and UL, or a fuse certified by UL between power supply and noise filter. Observance of this condition allows conformance with UL508C (file No. E164620) . |
| Noise filter | When installing one noise filter at the power supply for more than one brushless motor used, contact the manufacturer of noise filter. |
| Surge absorber | Install a surge absorber on the primary side of noise filter. However, in performing the voltage resistance test of machine and equipment, be sure to remove the surge absorber; otherwise, the surge absorber may be ruptured. |
| Grounding | Be sure to connect the grounding Terminal of brushless amplifier and protective grounding wire (PE) of system for preventing electric shock. Do not tighten the grounding wires together but connect them individually. |

## Wiring of peripheral equipment

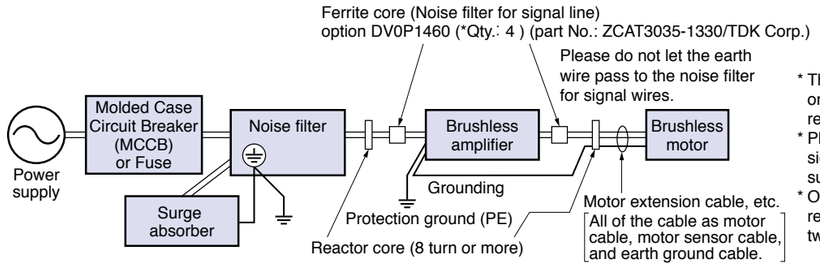


* The ferrite core should attach one or more pieces in an electric wire, respectively.
* Please attach the noise filter for signal wires also to signal wires, such as I/O, if needed.
* Only KV series is required for a reactor core. (An earth wire is also twisted around a reactor core.)

### Reactor core (Recommended components)

• RJ8035

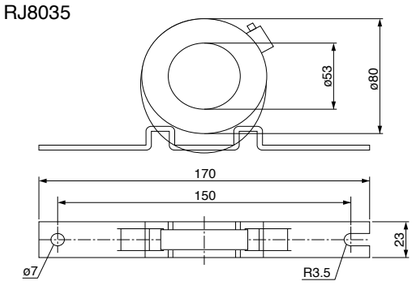


| Current | 100 kHz (μH) | Core thickness |
|---|---|---|
| 35 A | 9.9±3 | 24 mm |

## List of compatible peripheral equipment

| Part name | Optional parts number (option) | Manufacturer's parts number | Qty. | Manufacturer | Reference page |
|---|---|---|---|---|---|
| Noise filter (single phase 100 V, 200 V) | DV0P4170 | SUP-EK5-ER-6 | 1 | OKAYA ELECTRIC IND. CO., LTD. | P.67 |
| Noise filter (3-phase) | DV0PM20042 | 3SUP-HU10-ER-6 | 1 | | |
| Surge absorber (single phase 100 V, 200 V) | DV0P4190 | R·A·V-781BWZ-4 | 1 | | |
| Surge absorber (3-phase) | DV0P1450 | R·A·V-781BXZ-4 | 1 | | |
| Noise filter for control signals | DV0P1460 | ZCAT3035-1330 | 4 | TDK Corporation | |
| Reactor core | – | RJ8035 | – | KK-CORP.CO.JP | P.94 |

# Table of model numbers and options

## GV series

| Power supply | Rated rotation speed (r/min) | output (W) | Motor | Gear head (Note 1) | Brushless amplifier | Brushless amplifier (supplied with power cable) (Note 2) | External regenerative resistor | Noise filter | Surge absorber | Reactor | | Motor extension cable | Power supply connector kit | Console A | Console A connection cable | Digital key pad | Digital key pad connection cable | External speed setter | Control signal cable | I/O connector kit | Panel connector kit | PC connection cable (Note 4) | Noise filter for signal line | DIN rail attachment unit |
|---|---|---|---|---|---|---|---|---|---|---|---|---|---|---|---|---|---|---|---|---|---|---|---|---|
| Single phase 100 V | 3000 | 50 | MBMU5AZAX | MX8G□B | MBEG5A1BCV | MBEG5A1BCVC | for 100 V DV0P2890 | for single phase power supply DV0P4170 | for single phase power supply DV0P4190 | for single phase power supply DV0P227 | | 1 m DV0PQ1000110 3 m DV0PQ1000130 5 m DV0PQ1000150 10 m DV0PQ10001A1 | DV0P2870 | DV0P3500 | 1 m DV0PM2006910 3 m DV0PM2006930 5 m DV0PM2006950 | DV0P3510 | 1 m DV0P38310 3 m DV0P38330 5 m DV0P38350 | DV0PM20078 | 2 m DV0PM20076 | DV0PM20070 | DV0P3610 | 1.5 m DV0P4140 | DV0P1460 | DV0P3811 |
| | | | MBMU5AZAS | — | | | | | | | | | | | | | | | | | | | | |
| | | 90 | MBMU9A1AZ | MZ9G□B MY9G□B | MBEG9A1BCV | MBEG9A1BCVC | | | | | | | | | | | | | | | | | | |
| | | | MBMU9A1AS | — | | | | | | | | | | | | | | | | | | | | |
| | | 130 | MBMU1E1AZ | MZ9G□B MY9G□B | MBEG1E1BCV | MBEG1E1BCVC | | | | | | | | | | | | | | | | | | |
| | | | MBMU1E1AS | — | | | | | | | | | | | | | | | | | | | | |
| Single phase/ 3-phase 200 V | | 50 | MBMU5AZAX | MX8G□B | MBEG5A5BCV | MBEG5A5BCVC | for 200 V DV0PM20068 | for single phase power supply DV0P4170 for 3-phase power supply DV0PM20042 | for single phase power supply DV0P4190 for 3-phase power supply DV0P1450 | for single phase power supply DV0P227 for 3-phase power supply DV0P220 | | | | | | | | | | | | | | |
| | | | MBMU5AZAS | — | | | | | | | | | | | | | | | | | | | | |
| | | 90 | MBMU9A2AZ | MZ9G□B MY9G□B | MBEG9A5BCV | MBEG9A5BCVC | | | | | | | | | | | | | | | | | | |
| | | | MBMU9A2AS | — | | | | | | | | | | | | | | | | | | | | |
| | | 130 | MBMU1E2AZ | MZ9G□B MY9G□B | MBEG1E5BCV | MBEG1E5BCVC | | | | | | | | | | | | | | | | | | |
| | | | MBMU1E2AS | — | | | | | | | | | | | | | | | | | | | | |

## KV series

| Power supply | Rated rotation speed (r/min) | output (W) | Motor (Note 3) | Gear head | Brushless amplifier | Brushless amplifier (supplied with power cable) (Note 2) | External regenerative resistor | Noise filter | Surge absorber | Reactor | | Motor extension cable | Power supply connector kit | Console A | Console A connection cable | Digital key pad | Digital key pad connection cable | External speed setter | Control signal cable | I/O connector kit | Panel connector kit | PC connection cable (Note 4) | Noise filter for signal line | DIN rail attachment unit |
|---|---|---|---|---|---|---|---|---|---|---|---|---|---|---|---|---|---|---|---|---|---|---|---|---|
| Single phase 100 V | 3000 | 50 | MBMS5AZBL○ | — | MBEK5A1BCV | MBEK5A1BCVC | for 100 V DV0P2890 | for single phase power supply DV0P4170 | for single phase power supply DV0P4190 | for single phase power supply DV0P227 | | 1 m DV0PQ1000310 3 m DV0PQ1000330 5 m DV0PQ1000350 10 m DV0PQ10003A1 | DV0P2870 | DV0P3500 | 1 m DV0PM2006910 3 m DV0PM2006930 5 m DV0PM2006950 | DV0P3510 | 1 m DV0P38310 3 m DV0P38330 5 m DV0P38350 | DV0PM20078 | 2 m DV0PM20076 | DV0PM20070 | DV0P3610 | 1.5 m DV0P4140 | DV0P1460 | DV0P3811 |
| | | 100 | MBMS011BL○ | | MBEK011BCV | MBEK011BCVC | | | | | | | | | | | | | | | | | | |
| | | 200 | MBMS021BL○ | | MBEK021BCV | — | | | | for single phase power supply DV0P228 | | | — | | | | | | | | | | | — |
| Single phase/ 3-phase 200 V | | 50 | MBMS5AZBL○ | | MBEK5A5BCV | MBEK5A5BCVC | for 200 V DV0PM20068 | for single phase power supply DV0P4170 for 3-phase power supply DV0PM20042 | for single phase power supply DV0P4190 for 3-phase power supply DV0P1450 | for single phase power supply DV0P227 for 3-phase power supply DV0P220 | | | DV0P2870 | | | | | | | | | | | DV0P3811 |
| | | 100 | MBMS012BL○ | | MBEK015BCV | MBEK015BCVC | | | | | | | | | | | | | | | | | | |
| | | 200 | MBMS022BL○ | | MBEK025BCV | — | | | | | | | — | | | | | | | | | | | — |
| | | 400 | MBMS042BL○ | | MBEK045BCV | | | | | | | | | | | | | | | | | | | |
| 3-phase 200 V | | 750 | MBMS082BL○ | | MBEK083BCV | | | for 3-phase power supply DV0PM20042 | for 3-phase power supply DV0P1450 | for 3-phase power supply DV0P220 | | | | | | | | | | | | | | |

## GP series

| Power supply | Rated rotation speed (r/min) | output (W) | Motor | Gear head (Note 1) | Brushless amplifier | Brushless amplifier (supplied with power cable) (Note 2) | External regenerative resistor | Noise filter | Surge absorber | Reactor | | Motor extension cable | Power supply connector kit | Console A | Console A connection cable | Digital key pad | Digital key pad connection cable | External speed setter | Control signal cable | I/O connector kit | Panel connector kit | PC connection cable (Note 4) | Noise filter for signal line | DIN rail attachment unit |
|---|---|---|---|---|---|---|---|---|---|---|---|---|---|---|---|---|---|---|---|---|---|---|---|---|
| Single phase 100 V | 3000 | 50 | MBMU5AZAB | MB8G□BV | MBEG5A1BCP | MBEG5A1BCPC | for 100 V DV0P2890 | for single phase power supply DV0P4170 | for single phase power supply DV0P4190 | for single phase power supply DV0P227 | | 1 m DV0PQ1000110 3 m DV0PQ1000130 5 m DV0PQ1000150 10 m DV0PQ10001A1 | DV0P2870 | — | — | DV0P3510 | 1 m DV0P38310 3 m DV0P38330 5 m DV0P38350 | — | 2 m DV0PM20076 | DV0PM20070 | — | 1.5 m DV0P4140 | DV0P1460 | DV0P3811 |
| | | 90 | MBMU9A1AB | MB9G□BV | MBEG9A1BCP | MBEG9A1BCPC | | | | | | | | | | | | | | | | | | |
| | | 130 | MBMU1E1AB | MB9G□BV | MBEG1E1BCP | MBEG1E1BCPC | | | | | | | | | | | | | | | | | | |
| Single phase/ 3-phase 200 V | | 50 | MBMU5AZAB | MB8G□BV | MBEG5A5BCP | MBEG5A5BCPC | for 200 V DV0PM20068 | for single phase power supply DV0P4170 for 3-phase power supply DV0PM20042 | for single phase power supply DV0P4190 for 3-phase power supply DV0P1450 | for single phase power supply DV0P227 for 3-phase power supply DV0P220 | | | | | | | | | | | | | | |
| | | 90 | MBMU9A2AB | MB9G□BV | MBEG9A5BCP | MBEG9A5BCPC | | | | | | | | | | | | | | | | | | |
| | | 130 | MBMU1E2AB | MB9G□BV | MBEG1E5BCP | MBEG1E5BCPC | | | | | | | | | | | | | | | | | | |

(Note 1) A figure representing reduction ratio in □ .
(Note 2) Refer to p. 74 for a power supply connecting cable.
This part number is the ordering part number for the amplifier and power cable, not for ordering amplifier only.
(Note 3) Suffix of " ○ " in the motor model represents shape of shaft. For more information, please refer to p. 27.
(Note 4) When connecting PC, the PC connection cable (DV0P4140) and the Digital key pad connection cable (DV0P383*0) are required.
If your PC does not have RS232 port, use RS232-USB converter.

- When installing the reactor, refer to p. 73.
- Be sure to use a set of matched components (series, power source, capacity, output, etc.)

# Index

# Index





MEMO

# Sales office

## [Panasonic Sales Office of Motors]

(April.01.2015)

| Country | Company Name [Category] | City | Address | TEL / FAX |
|---|---|---|---|---|
| U.S.A | Panasonic Industrial Devices Sales Company of America [Sales office] | New Jersey | Two Riverfront Plaza, 7th Floor Newark, NJ 07102-5490 U.S.A | TEL: +1-800-228-2350 |
| | | | | FAX: — |
| Brazil | Panasonic do Brazil [Sales office] | Sao Paulo | Avenida do Cafe, 277 Torre A-8 Andar Jabaquara ZIP Code: 04311-900 Sao Paulo SP Brazil | TEL: +55-11-3889-4022 |
| | | | | FAX: +55-11-3889-4103 |
| Germany | Panasonic Industrial Devices Sales Europe GmbH [Sales office] [European Headquarter] | Munich | Hans-Pinsel-Strasse 2 · D - 85540 Haar · Germany | TEL: +49-89-46-159-0 |
| | | | | FAX: +49-89-46-159-212 |
| | | | | e-mail: http://eu.industrial.panasonic.com/about-us/contact-us |
| | | | | Web site: http://eu.industrial.panasonic.com/products/motors-compressors-pumps |
| | ghv Vertriebs-GmbH [Distributors] | Munich | Am Schammacher Feld 47 D-85567 Grafing b. Munich | TEL: +49(0)-80-92/81-89-0 |
| | | | | FAX: +49(0)-80-92/81-89-99 |
| | | | | e-mail: http://www.ghv.de/kontakt.html |
| | Panasonic Electric Works Europe AG [Sales office] [European Headquarter] | Holzkirchen | Rudolf-Diesel-Ring 2, 83607 Holzkirchen, Deutschland | TEL: +49 (0) 8024 648-0 |
| | | | | FAX: +49 (0) 8024 648-111 |
| | | | | e-mail: https://www.panasonic-electric-works.com/eu/93.htm |
| | | | | Web site: https://www.panasonic-electric-works.com/eu/index.htm |
| | Panasonic Electric Works Europe AG [Subsidiary] | Holzkirchen | Rudolf-Diesel-Ring 2, 83607 Holzkirchen, Deutschland | TEL: +49 (0) 8024 648-0 |
| | | | | FAX: +49 (0) 8024 648-111 |
| | | | | e-mail: https://www.panasonic-electric-works.com/eu/93.htm |
| | | | | Web site: https://www.panasonic-electric-works.com/eu/index.htm |
| Italy | Lenze Italia S.r.l. [Distributors] | Milano | Viale Monza 338 20128 Milano | TEL: +39-02-270-98-1 |
| | | | | FAX: +39-02-270-98-290 |
| | | | | e-mail: mail@LenzeItalia.it |
| | | | | Web site: http://www.lenze.com/it-it/azienda/lenze-in-italia/ |
| United Kingdom | Lenze Limited [Distributors] | Bedford | Priory Business Park, Bedford, MK44 3WH. | TEL: +44-1234-7532-00 |
| | | | | FAX: +44-1234-7532-20 |
| | | | | e-mail: uk.sales@lenze.com |
| | | | | Web site: http://www.lenze.com/en-gb/about-lenze/lenze-in-united-kingdom/ |
| Romania | C.I.T. Automatizari SRL [Distributors] | Bucuresti | sos. Bucuresti, nr.63, Ciorogirla, Ilfov, RO-077055, ROMANIA | TEL: +40-21-255-0543 |
| | | | | FAX: +40-21-255-0544 |
| | | | | e-mail: office@citautomatizari.ro |
| | | | | Web site: http://www.citautomatizari.ro |
| Russia | Electroprivod Ltd. [Distributors] | St.Petersburg | Office 417, litera 43, Polustrovskiy avenue, Saint-Petersburg, Russia | TEL: +7-812-703-09-81 |
| | | | | FAX: +7-812-493-27-26 |
| | | | | Web site: http://www.electroprivod.ru |
| Turkey | BOSTEK TEKNOLOJI GELISTIRME VE ROBOT SIST.SAN.TIC.A.S [Distributors] | Izmir | 10042 SOK.NO:10 A.O.S.B CIGLI-IZMIR, TURKEY | TEL: +90 232 433 8515 |
| | | | | FAX: +90 232 433 8881 |
| | | | | e-mail: sales@bostek.com.tr |
| | | | | Web site: http://www.bostek.com.tr/ |
| | Savior Kontrol Otomasyon [Distributors] | Istanbul | Des Sanayi Sitesi 104 Sokak A07 Blok No:02 Yukarı Dudullu Ümraniye İstanbul Turkey | TEL: +90-216-466-3683 |
| | | | | FAX: +90-216-466-3685 |
| | | | | e-mail: info@savior.com.tr |
| | | | | Web site: http://www.savior.com.tr/ |
| China | Panasonic Industrial Devices Sales (Hong Kong) Co.,Ltd. (PIDSHK) [Sales office] | Hong kong | Top Floor, South Wing, ChinaChem Gloden Plaza, 77 Mody Road, S.T.S. East, Kowloon, HongKong | TEL: +852-2529-7322 |
| | | | | FAX: +852-2598-9743 |
| | Panasonic Industrial Devices Sales (China) Co.,Ltd. (PIDSCN) [Sales office] | Shanghai | Floor 6, China Insurance Building, 166 East Road LuJiaZui PuDong New District, Shanghai, China | TEL: +86-21-3855-2442 |
| | | | | FAX: +86-21-3855-2375 |
| | Panasonic Industrial Devices Sales (China) Co.,Ltd. (PIDSCN) [Sales office] | Shenzhen | 8/F, Tower Three, Kerry Plaza, 1-1 Zhongxinsi Road, Futian District, Shenzhen, China | TEL: +86-755-8255-8791 |
| | | | | FAX: — |



| Country | | Company Name [Category] | City | Address | TEL / FAX |
|---|---|---|---|---|---|
| Korea | | Panasonic Industrial Devices Sales Korea Co., Ltd. (PIDSKR) [Sales office] | Seoul | 6F DONG-IL Tower 38, Teheran-ro 114-gil, Gangnam-gu, Seoul, 135-851, Korea | TEL: +82-2-795-9600 |
| | | | | | FAX: +82-2-2052-1053 |
| Taiwan | | Panasonic Industrial Devices Sales Taiwan Co.,Ltd. [Sales office] | Taipei | 12F, No.9, SongGao Rd., Taipei 110, Taiwan, R.O.C. | TEL: +886-2-2757-1900 |
| | | | | | FAX: +886-2-2757-1977 |
| India | | Industrial Division, Panasonic India Pvt Ltd. [Sales office] | Gurgaon, Haryana | 12th Floor, Ambience Commercial, Behind Ambience Mall, Gurgaon - 122002, Haryana, India | TEL: +91-124-6670400 |
| | | | | | FAX: +91-124-6670338 |
| | | | | | Web site: http://industrial.panasonic.com/sa/products/motors-compressors/fa-motors |
| | | Lubi Electronics [Distributors] | Gandhinaga, Gujarat | Sardar Patel Ring Road, Near Bright School, Nana Chiloda, Dist.: Gandhinagar - 382330, Gujarat, India | TEL: +91-79-39845300 |
| | | | | | FAX: +91-79-39845599 |
| | | | | | Web site: http://www.lubielectronics.com |
| | | Luna Bearings [Distributors] | Mumbai, Maharashtra | 59, Bibijan Street, 2nd Floor, Moiz Manzil, Mumbai - 400003, Maharashtra, India | TEL: +91-22-23455052 |
| | | | | | FAX: +91-22-23427773 |
| | | | | | Web site: http://www.lunabearings.com |
| | | Vashi Electricals Pvt. Ltd. [Distributors] | Mumbai, Maharashtra | A/6, Plot No.74, Shree Ganesh Complex, Behind Gupta Compound, Dapole Road, Mankoli Naka, Bhiwandi - 421305, Maharashtra, India | TEL: +91-2522-661600 |
| | | | | | FAX: +91-2522-661620 |
| | | | | | Web site: http://www.vashielectricals.com |
| South-eastern Asia | | Panasonic Industrial Devices Sales Asia Pte.Ltd. [Sales office] | Singapore | No.3 Bedok South Road Singapore 469269 | TEL: +65-6390-3718 |
| | | | | | FAX: +65-9435-6844 |
| | Singapore | Intermech Machinery Pte. Ltd. [Distributors] | Singapore | 2 Woodlands Sector 1 #03-25, Woodlands Spectrum 1 Singapore 738068 | TEL: +65-6751-5088 |
| | | | | | FAX: +65-6759-2122 |
| | | | | | Web site: http://www.intermech.com.sg |
| | Malaysia | Panamech Machinery Sdn Bhd [Distributors] | Kuala Lumpur | No.14, Lorong Sanggul 1C, Bandar Puteri, 41200 Klang, Selangor Darul Ehsan | TEL: +60-3-5161-7876 |
| | | | | | FAX: +60-3-5161-7136 |
| | | | | | Web site: http://panamech.com.my/ |
| | | Panamech (PG) Sdn Bhd [Distributors] | Penang | Sri Relau Komplex, Unit 1-3-11, Persiaran Bukit Jambul 1, 11900 Penang | TEL: +60-4-643-8266 |
| | | | | | FAX: +60-4-645-1639 |
| | | | | | Web site: http://panamech.com.my/ |
| | Thailand | Premier Automation Center Co.,Ltd. [Distributors] | Bangkok | 73 Soi Ladkrabang 30 Ladkrabang Ladkrabang Bangkok 10520 | TEL: +66-2181-2299 |
| | | | | | FAX: +66-2181-2288 |
| | | | | | Web site: http://www.premier-ac.co.th |
| | | Plenty Island (Thai) Co.,Ltd. [Distributors] | Bangkok | 3 Soi Charoenrat 10, Charoenrat Road., Bangkhlo, Bangkhorlaem, Bangkok 10120 | TEL: +66-2291-9933 |
| | | | | | FAX: +66-2291-2065 |
| | | | | | Web site: http://www.plenty.co.th |
| | | Seng Charoen Muang Co.,Ltd. [Distributors] | Bangkok | 12/349 Moo 15, Bangkaew, Bangplee, Samutprakam 10540 | TEL: +66-2397-9577 |
| | | | | | FAX: +66-2361-8207 |
| | | | | | Web site: http://www.sengscm.com |
| | Indonesia | PT. Handal Yesindo Sejahtera [Distributors] | Surabaya | Jl. Raya Kutisari 8A, Surabaya, Indonesia | TEL: +62-31-843-8844 |
| | | | | | FAX: +62-31-841-4333 |
| | | | | | Web site: http://www.handalyesindo.com |
| | | PT.Riasarana Electrindo [Distributors] | Jakarta | Jl. Prof. Dr. Latumenten Grogol Permai blok D No. 8-15 Jakarta 11460, Indonesia | TEL: +62-21-564-9178 |
| | | | | | FAX: +62-21-566-7405 |
| | | | | | Web site: http://www.risacorps.com |
| | Philippines | Movaflex Designs Unlimited, Inc. [Distributors] | Manila | 136 Calbayog Street, Mandaluyong City, Metro Manila, Philippines. | TEL: +63-2-881-3636 |
| | | | | | FAX: +63-2-998-3881 |
| | | | | | Web site: http://www.movaflex.com/ |